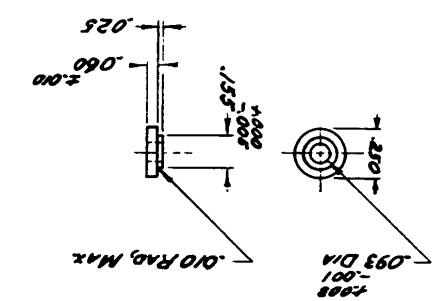

PLASTIC TYPE PBE, FORM R,
PER SPEC. MIL-P-79.

NOTE:
*FOR INFORMATION ONLY,
CONTRACTOR MAY AT HIS
OPTION DEVIATE FROM
THESE PRECISE DETAILS

NEXT ASSEMBLY	USED ON
SM-B-170784	SC-DL-170759
SM-C-283265	SC-DL-248175

REVISIONS			
SYM	DESCRIPTION	DATE	APPROVAL

NOTICE: When Government drawings, specifications, or other data are used for any purpose other than in connection with a definitely related Government procurement operation, the United States Government thereby incurs no responsibility or any obligation whatsoever; and the fact that the Government may have formulated, furnished, or in any way supplied the said drawings, specifications, or other data is not to be regarded by implication or otherwise as in any manner licensing the holder or any other person or corporation, or conveying any rights or permission to manufacture, use or sell any patented invention that may in any way be related thereto.

UNLESS OTHERWISE SPECIFIED
DIMENSIONS ARE IN INCHES
TOLERANCES ON
FRACTIONS ± ———
DECIMALS ± .005
ANGLES ±
COMMERCIAL TOLERANCES APPLY TO STOCK SIZES
ALL SURFACES ✓

AUTHENTICATION	
DRAWN	ZIBER-PN-60-93
TRACED	PHOTO
CHECKED	Dem
VERIFIED	PDAR
APPROVED	PDAR
RETURNED	PDE
DATE	1-MAY-53

WASHER

SCALE	2/1
FINISH	———

DEPARTMENT OF THE ARMY
SIGNAL CORPS ENGINEERING LABORATORIES
FORT MONMOUTH NEW JERSEY

SM-B-170787

WHEN REFERRING TO THIS DRAWING STATE DRAWING NO., APPLICABLE ISSUE SYMBOL AND DATE

SIZE	PART NO.	DESCRIPTION	MAT.	SPEC.	NOTE

SCALE: 1/1

506-0185-006 CU-88