PK-232 MBX
Operating Manual

MODEL PK-232MBX DATA CONTROLLER

Timewave Technology Inc.

PROPRIETARY INFORMATION

Reproduction, dissemination or use of information contained herein for purposes other than operation and/or maintenance is prohibited without written authorization from Timewave Technology Inc.

PREFACE TO THE PK-232 OPERATING MANUAL

Please read this preface in its entirety. It contains information about how to receive warranty service from Timewave and Timewave's software update policy.

RF Interference Information To User

This PK-232 has been certified under Subpart J of Part 15 of the FCC rules.

This equipment generates and uses radio frequency energy. If not installed and used properly, in strict accordance with AEA's instructions, it may cause interference to radio and TV reception. It has been type-tested and has been found to comply with the limits of a Class B digital device in accordance with the specifications in Part 15 Subpart J of the FCC rules, which are designed to provide reasonable protection against such interference in a residential installation. However, there is no guarantee that interference will not occur in a particular installation. If this equipment does cause interference to radio or TV reception, which can be determined by turning the PK-232 on and off, the user is encouraged to try and correct the interference using one or more of the following measures:

- Re-orient the antenna of the device receiving interference.
- Relocate the PK-232 or computer with respect to this device.
- Plug the PK-232 into a different outlet so the PK-232 and the device are on different branch circuits.

If necessary, the user should consult the dealer or an experienced radio/TV technician for additional suggestions. The user may find "How to Identify and Resolve Radio-TV Interference Problems", a booklet prepared by the FCC, helpful.

YOU MUST USE SHIELDED CABLE FOR ALL CONNECTIONS

As part of its continuing program of product improvement, AEA reserves the right to make changes in this product's specifications or documentation.

There may be inaccuracies or typographical errors in this document. Please address comments and corrections to AEA Incorporated, PO Box C2160, Lynnwood, WA 98036-0918. AEA reserves the right to incorporate and issue any information thus supplied in whatever manner it deems suitable without incurring any obligations whatsoever.

Copyright Timewave Technology Inc., 2001. All rights reserved.
No part of this manual may be reproduced or used in any form or by any means without prior written permission from the copyright owner.

Welcome

Congratulations!! You've purchased another fine Timewave product.
PLEASE, before we go any further, may we ask you to FILL OUT AND RETURN the Warranty Registration Card, which has been packed with your PK-232 system.

Product Update Policy

From time to time Timewave may make available updates to the design of its products.
We can only tell you about these updates if we have your warranty card on file.
PLEASE SEND IT IN if you have not already done so.

In Case of Trouble

Application and troubleshooting assistance may be had by calling Timewave from 9:00-12:00 A.M. or 1:00-4:00 P.M. in St. Paul, MN. Ask for the Technical Support Department. The phone number is 651-489-5080. Please have your PK-232's serial number and version date of the software available. The version date is on the first screen that comes up when you turn on the PK-232. We will also need to know the nature of any other equipment connected to the PK-232.

You may wish to attempt to solve problems locally, using other hams or an Timewave dealer. With over 100,000 PK-232s in use, a helpful Amateur with equipment similar to your own may literally be just around the corner. Substituting another PK-232 that you know is working properly for your questionable one is a diagnostic technique that will check out the rest of your station. You may also try running your PK-232 in another station if possible.

Timewave provides Technical Support for its line of amateur radio equipment by way of your personal computer and modem on the internet! Timewave's email addresses for serice and tech support are mailto:service@timewave.com and techsupport@timewave.com.

If you call for assistance, please have your PK-232 up and running beside the phone. Our Support technician will likely ask you to perform certain keyboard routines to aid in diagnosis. If you have a voltmeter handy, you might have the PK-232 open so you can report measurements to the Support technician.

Many of the Timewave products that are sent to us for repair are in perfectly good order when we receive them. There is a check-out charge of $40 for units returned to us in working order. Please perform whatever steps are applicable from the installation sections of this manual.

PLEASE DO NOT RETURN THE PK-232 TO US WITHOUT CONTACTING US FOR PERMISSION AND AN RMA NUMBER. WE WOULD LIKE THE OPPORTUNITY TO TROUBLESHOOT THE PROBLEM OVER THE PHONE FIRST, SAVING YOU BOTH TIME AND MONEY.

If the unit must be sent in, we will give you a Return to Manufacturer Authorization (RMA) number over the telephone. This number allows us to track your unit and provide you with its status. Please write this number on the outside of the box so we may process your unit as quickly as possible.

Timewave address is:

Timewave Technology Inc.
501 W. Lawson Ave.
ST. Paul, MN 55117 USA

Attn. Service
RMA # ????????? obtain by telephone or email from Timewave)

We will need YOUR street address for UPS return - be sure to send it. Please include your daytime telephone number in case we need to contact you for further information.

UPS Surface (Brown Label) takes 5-6 days, Blue takes 2-3 days. Red is an overnight service and is expensive. Send the PK-232 in a way that it can be traced if we cannot verify receipt of shipment. We suggest UPS or insured postal shipment.

If the PK-232 is still under the original owner's warranty, Timewave will pay the

cost of the return shipment to you. The current policy is that it will be returned UPS Brown. If the owner wishes to PK-232 to be returned Blue, Red or by other overnight service he must furnishes the return cost for the method he selects.

If the PK-232 is out of warranty, it will be returned by UPS Brown COD unless: 1) It was received UPS Blue/Red in which case it will go back UPS Blue COD, or 2) If you designate billing to VISA or MASTERCARD or American Express, or 3) you prepay the service charges with a personal check, or 4) you specify some other method of return.

Typically, we will service the product in five to ten working days after it has arrived at Timewave if we have all the facts. If we must call you, it may take longer. PLEASE include a letter stating the problem and where you can be reached by telephone. If you can be reached by phone in the evening on the East Coast, let us know the number. Our current rate for non-warranty service of the PK-232 is a flat rate of $75 which includes return shipping. Timewave is not responsible for damage such as caused by lightning, nonprofessional alterations, poor storage/handling, etc. We will make note of any shipping damage upon receipt. See the inside back cover for Warranty information.

Should your warranty card not be on file at Timewave, you need to send the proof of purchase date to receive warranty service. Typically a copy of your bill of sale from an Timewave dealer will suffice.

The warranty is for the original owner only and is not transferable.

TABLE OF CONTENTS

CHAPTER 1 - INTRODUCTION

Paragraph		Page
1.1	Overview	1-1
1.1.1	Capabilities	1-1
1.1.2	Included Components	1-1
1.2	Computer or Computer Terminal Requirements	1-2
1.3	Station Requirements	1-2
1.3.1	System Transmitter-Receiver Performance Requirements	1-2
1.4	PK-232 Specifications	1-3
1.4.1	Modem Characteristics	1-3
1.4.2	Processor System	1-3
1.4.3	Input/Output Connections	1-3
1.4.4	Controls and Indicators	1-4
1.4.5	General	1-4

CHAPTER 2 - COMPUTER INSTALLATION

2.1	Overview	2-1
2.1.1	Equipment Required	2-1
2.2	Unpacking the PK-232	2-1
2.2.1	Connecting Power	2-2
2.3	Connecting Your Computer or Computer Terminal	2-3
2.3.1	IBM-PC/XT/AT and Compatibles	2-3
2.3.2	Apple Macintosh Series of Computers	2-4
2.3.3	Commodore 64 and 128 Computers	2-4
2.3.4	Computer Terminal	2-4
2.4	Setting Up Your Communications or Terminal Software Program	2-4
2.4.1	Terminal Programs for IBM-PCs and Compatibles	2-5
2.4.2	Terminal Programs for the Apple Macintosh	2-5
2.4.3	Terminal Programs for the Commodore 64, 64C and 128	2-6
2.5	System Startup and Loop-back Test	2-6
2.6	Detailed RS-232 Connections for Other Computers	2-10
2.6.1	Other Computers with RS-232-C Ports	2-11
2.6.2	Other Computers with Non-Standard Serial Ports	2-11
2.7	Terminal (Modem) Software for Other Computers	2-12

CHAPTER 3 - RADIO INSTALLATION

3.1	Overview	3-1
3.1.1	Equipment Required	3-1
3.2	Receive-Only Radio Connections	3-1
3.3	Transmit and Receive Radio Connections	3-2
3.3.1	Transceiver's Microphone or Accessory Connector?	3-2

CHAPTER 3 - RADIO INSTALLATION (Continued)

Paragraph		Page
3.3.2	Connections for Specific Transceivers	3-2
3.3.3	Check Your Transceiver's Operating Manual	3-3
3.3.4	Specific Connection Points	3-3
3.3.5	Begin Assembling your Radio Cable	3-4
3.3.5.1	Prepare the Radio Cable	3-4
3.3.5.2	Verify the Connection Points with Your Manual	3-4
3.3.5.3	Prepare the Connector	3-4
3.3.5.4	Wire the Connector	3-4
3.3.6	Wiring Your HF Transceiver for Direct CW Keying	3-6
3.3.7	Connections for Direct FSK Operation on RTTY	3-6
3.3.8	Connections for an Oscilloscope	3-7
3.4	PK-232 Configuration Jumpers and Connections	3-8
3.4.1	Push-To-Talk (PTT) Configuration	3-8
3.4.2	PK-232 Connections	3-8
3.5	Transceiver Adjustments	3-9
3.5.1	FM Transceiver Final Adjustments	3-9
3.5.2	SSB Transceiver Final Adjustments	3-10

CHAPTER 4 - PACKET RADIO

4.1	Overview	4-1
4.1.1	Getting Started	4-1
4.1.2	Making the Loopback Connection	4-1
4.2	Packet Introduction	4-2
4.3	VHF/UHF Packet Operation	4-4
4.3.1	What You Should See	4-5
4.3.2	What It Means	4-6
4.3.3	What Happens When You Connect	4-8
4.3.3.1	Standard TNCs	4-8
4.3.3.2	Mailbox Message Systems	4-8
4.3.3.3	Packet Switches	4-9
4.3.4	Who Can I Talk To?	4-11
4.3.5	Your First Real Connect	4-11
4.3.6	I'm Having Trouble Connecting	4-12
4.4	More Packet Features	4-13
4.4.1	LED Status and Mode Indicators	4-13
4.4.2	Automatic Greetings	4-13
4.4.3	Beacon Operation	4-13
4.4.4	Digipeater Details	4-14
4.4.4.1	Are You a Digipeater?	4-14
4.4.5	Monitoring Other Stations	4-15
4.4.5.1	Monitoring the Packet Networking Switches	4-15
4.4.5.2	Monitoring Other Stations While Connected	4-16
4.4.5.3	Selective Monitoring	4-16
4.4.5.4	The MFILTER Command	4-16
4.4.5.5	Monitor Without Callsign Headers	4-16
4.4.5.6	MSTAMP - The Monitor Time-Stamp Command	4-16
4.4.6	Packet Connects	4-17
4.4.6.1	Time-Stamping Connects	4-17
4.4.6.2	Connect Alarm	4-17
4.4.7	Packet Formatting and Editing	4-17
4.4.7.1	Carriage Returns and Linefeeds in Packets	4-17
4.4.7.2	Canceling Lines and Packets	4-18

CHAPTER 4 - PACKET RADIO (Continued)

Paragraph		Page
4.4.7.3	Redisplay	4-18
4.4.7.4	The PASS Character	4-18
4.4.8	Packet Transmit Timing	4-18
4.4.8.1	TXDELAY and AUDELAY	4-18
4.4.8.2	AXDELAY and AXHANG	4-19
4.5	Packet Protocol Basics	4-19
4.5.1	Unconnected Packets	4-20
4.5.2	Connected Packets	4-20
4.5.3	FRACK and RETRY	4-20
4.5.4	PACLEN and MAXFRAME	4-20
4.5.5	Reducing Errors Through Collision Avoidance	4-20
4.5.6	CHECK and RELINK	4-21
4.6	Multiple Connection Operation	4-21
4.6.1	Multiple Connection Description	4-21
4.6.2	The Channel Switching Character	4-22
4.6.3	Will You Accept Multiple Connects	4-22
4.6.4	Display Multiple Connected Callsigns	4-22
4.6.5	Doubling Received CHSWITCH Characters	4-22
4.6.6	Checking Your Connect Status with the CSTATUS Command.	4-22
4.6.7	The MULT LED	4-22
4.7	HF Packet Operation	4-23
4.7.1	Where to Operate HF Packet	4-23
4.7.2	PK-232 HF Packet Settings	4-23
4.7.3	HF Receiver Settings	4-23
4.7.4	Tuning In HF Packet Stations	4-23
4.7.5	Transmitter Adjustments	4-24
4.7.6	Going On The Air	4-25
4.8	Advanced Packet Operation	4-25
4.8.1	Transparent Mode	4-25
4.8.2	Sending 8-bit Data in Converse Mode	4-25
4.8.3	The ALTMODEM Command	4-26
4.8.4	The CFROM Command	4-26
4.8.5	Operating in Full-Duplex	4-26
4.8.6	Identifying as a Digipeater	4-26
4.8.7	Digipeater Alias Callsign	4-26
4.8.8	Morse ID in Packet	4-26
4.8.9	Sharing Packet Channels With Voice Operation	4-26
4.8.10	Disabling Transmit Operation	4-26
4.9	Seldom Used Commands	4-26
4.10	Packet Lite HF Packet Protocol Extension	4-27
4.10.1	Enabling Packet Lite	4-27
4.10.2	Compatibility With Standard AX.25 Stations	4-28
4.10.3	Packet Lite Protocol Enhancement Summary	4-28

CHAPTER 5 - MAILDROP OPERATION

5.1	Overview of PakMail Operation	5-1
5.1.1	RAM Space for Message Storage	5-1
5.1.2	System Commands	5-1
5.1.3	Your MailDrop Callsign	5-1
5.1.4	Start and Stop MailDrop Operation	5-1
5.2	Local Logon	5-1
5.2.1	Monitor MailDrop Operation	5-2
5.2.2	Caller Prompts	5-2
5.3	SYSOP MailDrop Commands	5-2

CHAPTER 5 - MAILDROP OPERATION (Continued)

Paragraph		Page
5.4	Remote User MailDrop Commands	5-3
5.4.1	A (ABORT)	5-3
5.4.2	B (BYE)	5-3
5.4.3	E (Edit #)	5-3
5.4.4	H (HELP)	5-4
5.4.5	J (JLOG)	5-4
5.4.6	K n (KILL n [Mine])	5-5
5.4.7	L (LIST [Mine])	5-5
5.4.8	R n (READ n [Mine])	5-5
5.4.9	S callsign (SEND callsign)	5-5
5.4.9.1	Sending Other Types of Messages with SEND	5-6
5.4.10	V (VERSION)	5-7
5.4.11	? (HELP)	5-7
5.5	Sample MailDrop Session - The Remote User's Point of View	5-7
5.5.1	Connect and Logon	5-7
5.5.2	LIST Messages	5-7
5.5.3	READ Messages	5-8
5.5.4	KILL Messages	5-8
5.5.5	SEND Messages	5-8
5.5.6	Log Off and Disconnect	5-9
5.6	Sample MailDrop Session - MailDrop SYSOP's Point of View	5-9
5.6.1	Message Numbers	5-10
5.7	Forwarding and Reverse Forwarding with the PK-232 MailDrop	5-10
5.7.1	MailDrop Settings for Auto-Forwarding	5-11
5.7.2	Entering a Message for Reverse Forwarding	5-11

CHAPTER 6 - BAUDOT AND ASCII RTTY OPERATION

6.1	Overview	6-1
6.2	Where to Operate Baudot and ASCII RTTY	6-1
6.2.1	PK-232 Baudot RTTY Parameter Settings	6-1
6.2.2	HF Receiver Settings	6-2
6.2.3	Tuning in Baudot and ASCII Stations	6-2
6.3	Transmitter Adjustments	6-3
6.3.1	Going On The Air	6-3
6.4	A Typical Baudot RTTY Contact	6-4
6.4.1	Calling CQ	6-4
6.4.2	Answering a CQ	6-4
6.5	Baudot RTTY Operating Tips	6-5
6.5.1	Changing Speed	6-5
6.5.2	Entering Your Auto-AnswerBack	6-5
6.5.3	Formatting Your Transmitted and Received Text	6-6
6.5.4	Sending a Synchronous Idle or DIDDLE	6-6
6.5.5	Echoing Transmitted characters As Sent	6-6
6.5.6	Sending Only Complete Words	6-6
6.5.7	Operating on the Wrong Sideband	6-6
6.5.8	UnShift-On-Space (USOS)	6-6
6.5.9	Operating at Commercial or VHF Wide RTTY Shifts	6-7
6.5.10	The CODE Command for International RTTY Compatibility	6-7
6.5.11	Copying Encoded RTTY Transmissions	6-7
6.6	ASCII RTTY Operation	6-7
6.6.1	Starting ASCII Operation	6-7
6.6.2	ASCII RTTY Operating Tips	6-8
6.6.3	Changing ASCII Baud Rates	6-8
6.6.4	Other RTTY Commands for ASCII Operation	6-8

CHAPTER 7 - AMTOR AND NAVTEX OPERATION

Paragraph		Page
7.1	Overview	7-1
7.2	Where to Operate AMTOR	7-1
7.2.1	PK-232 AMTOR Parameter Settings	7-1
7.2.2	Entering Your SELective CALling Code (MYSELCAL)	7-1
7.2.3	Entering Your SELective CALling Code (MYIDENT)	7-2
7.2.4	Enter the AMTOR Mode	7-2
7.2.5	HF Receiver Settings	7.2
7.2.6	Tuning in AMTOR Stations	7-3
7.3	Transmitter Adjustments	7-4
7.3.1	Going On The Air	7-4
7.3.2	Calling CQ in FEC AMTOR	7-4
7.3.3	Answering an FEC AMTOR CQ	7-4
7.3.4	ARQ AMTOR Operating Fundamentals	7-5
7.3.5	Ending an ARQ AMTOR Contact	7-5
7.3.6	LED Status and Mode Indicators	7-6
7.4	AMTOR Operating Tips	7-7
7.4.1	ARQ Break-In (ACHG Command)	7-7
7.4.2	Entering Your Auto-AnswerBack (AAB)	7-7
7.4.3	Speed Change Not Permitted	7-7
7.4.4	Echoing Transmitted Characters as Sent (EAS)	7-8
7.4.5	Sending Only Complete Words (WORDOUT)	7-8
7.4.6	Operating on the Wrong Sideband	7-8
7.5	Monitoring ARQ AMTOR Contacts with ALIST	7-8
7.6	AMTOR MailDrop Operation	7-9
7.6.1	Special Operating Considerations	7-9
7.6.2	Settings For AMTOR MailDrop Operation	7-9
7.6.3	Starting AMTOR MailDrop Operation	7-9
7.6.4	Local Logon to the MailDrop	7-10
7.6.4.1	Remote Logon to your AMTOR MailDrop	7-10
7.6.5	Caller Prompts	7-10
7.6.6	Monitor MailDrop Operation	7-11
7.6.7	SYSOP MailDrop Commands	7-11
7.6.8	Remote User MailDrop Commands	7-11
7.6.8.1	A (ABORT)	7-11
7.6.8.2	B (BYE)	7-11
7.6.8.3	H (HELP)	7-11
7.6.8.4	J (JLOG)	7-12
7.6.8.5	K n (KILL n [Mine])	7-12
7.6.8.6	L (LIST [Mine])	7-12
7.6.8.7	R n (READ n [Mine])	7-12
7.6.8.8	S callsign (SEND callsign)	7-12
7.7	AMTOR Switching-Time Considerations	7-13
7.7.1	Suggested AMTOR Operating Settings	7-13
7.7.2	Possible Areas for AMTOR Performance Improvement	7-13
7.8	NAVTEX Operation	7-14

CHAPTER 8 - MORSE OPERATION

8.1	Overview	8-1
8.2	Where to Operate Morse	8-1
8.2.1	PK-232 Morse Parameter Settings	8-1
8.2.2	HF Receiver Settings	8-1
8.2.3	Tuning in Morse Stations	8-1

Paragraph		Page
7.6.5	Caller Prompts	7-10
7.6.6	Monitor MailDrop Operation	7-11
7.6.7	SYSOP MailDrop Commands	7-11
7.6.8	Remote User MailDrop Commands	7-11
7.6.8.1	A (ABORT)	7-11
7.6.8.2	B (BYE)	7-11
7.6.8.3	H (HELP)	7-11
7.6.8.4	K (JLOG)	7-12
7.6.8.5	K n (KILL n (Mine))	7-12
7.6.8.6	L (LIST (Mine))	7-12
7.6.8.7	R n (READ n (Mine])	7-12
7.6.8.8	S callsign (SEND callsign)	7-12
7.7	AMTOR Switching-Time Considerations	7-13
7.7.1	Suggested AMTOR Operating Settings	7-13
7.7.2	Possible Areas for AMTOR Performance Improvement	7-13
7.8	NAVTEX Operation	7-14

CHAPTER 8 - MORSE OPERATION

8.1	Overview	8-1
8.2	Where to Operate Morse	8-1
8.2.1	PK-232 Morse Parameter Settings	8-1
8.2.2	HF Receiver Settings	8-1
8.2.3	Tuning in Morse Stations	8-1
8.3	Going On The Air	8-2
8.3.1	A Typical Morse Contact	8-2
8.4	Morse Operating Tips	8-3
8.4.1	Speed Change (MSPEED)	8-3
8.4.2	Echoing Transmitted Characters As Sent (EAS)	8-3
8.4.3	Sending only Complete Words (WORDOUT)	8-4
8.4.4	Speed Lock (LOCK)	8-4
8.5	Special Morse Characters	8-4
8.6	Morse Code Practice	8-4

CHAPTER 9 - FACSIMILE OPERATION

9.1	Overview	9-1
9.2	Finding FAX Frequencies	9-1
9.3	System Setup	9-2
9.3.1	HF Receiver Settings	9-2
9.3.2	Tuning In HF Facsimile Stations	9-2
9.3.3	PK-232 Facsimile Parameter Settings	9-3
9.4	Receiving Facsimile Broadcasts	9-3
9.5	Facsimile Operating Tips	9-4
9.5.1	Setting PRTYPE for Your Printer	9-4
9.5.2	Printing Direction (LEFTRITE)	9-5
9.5.3	Inverting Black and White (PAXNEG)	9-5
9.5.4	Printing Density	9-5
9.6	Printing Other Services	9-5
9.7	Transmitting FAX	9-5
9.8	Adjusting the PK-232 4.0 MHz Master Oscillator	9-6

CHAPTER 10 - SIGNAL IDENTIFICATION AND TDM OPERATION

Paragraph		Page
10.1	Overview	10-1
10.2	SIAM Operation	10-1
10.2.1	Tuning In FSK Narrow and Wide Stations	10-1
10.3	Using the SIAM Mode	10-2
10.3.1	Copying Encoded RTTY Transmissions	10-3
10.3.2	The CODE Command for International RTTY Compatibility.	10-3
10.4	TDM Receive Operation	10-4
10.4.1	TDM Parameters	10-4
10.4.2	Monitoring TDM Signals	10-4
10.4.3	Where to Find TDM Signals	10-4

CHAPTER 11 - Pactor OPERATION

11.1	Overview	11-1
11.2	Where to Operate Pactor	11-1
11.3	PK-232 Parameter Settings	11-2
11.3.1	Entering Your Callsign (MYCALL)	11-2
11.3.2	Entering the Pactor Mode	11-2
11.4	HF Receiver Settings	11-3
11.5	Tuning in Pactor Stations	11-3
11.6	Operating on Pactor	11-4
11.6.1	Going On the Air	11-4
11.6.2	Calling CQ in Unproto Mode	11-4
11.6.3	Answering an Unproto Pactor CQ	11-5
11.6.3.1	Ending an ARQ Pactor Contact	11-6
11.6.4	Long Path Contacts	11-6
11.6.5	LED Status and Mode Indicators	11-7
11.7	Pactor Operating Tips	11-8
11.7.1	ARQ.Break-In (ACHG Command)	11-8
11.7.2	Entering Your Auto-Answer Back (AAB)	11-9
11.7.3	Operating Pactor on Other Modem Frequencies and Shifts	11-9
11.7.4	Automatic Speed Change	11-9
11.7.5	Echoing Transmitted Characters As Sent (EAS)	11-9
11.7.6	Sending Only Complete Words (WORDOUT)	11-9
11.7.7	Operating on the Wrong Sideband	11-10
11.7.8	Little Used Pactor Commands	11-10
11.8	Monitoring ARQ Pactor Contacts with PTL	11-10
11.9	Pactor MailDrop Operation	11-11
11.9.1	Special Operating Considerations	11-11
11.9.2	Settings For Pactor MailDrop Operation	11-11
11.9.3	Starting Pactor MailDrop Operation	11-12
11.9.4	Local Logon to the MailDrop	11-12
11.9.4.1	Remote Logon to your Pactor MailDrop	11-12
11.9.5	Caller Prompts	11-12
11.9.6	Monitor MailDrop Operation	11-12

CHAPTER 11 - Pactor OPERATION (Continued)

Paragraph	Page	
11.9.7	SYSOP MailDrop Operation	11-13
11.9.8	Remote User MailDrop Commands	11-13
11.9.8.1	A (ABORT) (Remote Only)	11-13
11.9.8.2	B (BYE)	11-13
11.9.8.3	H (HELP)	11-13
11.9.8.4	J (JLOG)	11-13
11.9.8.5	K n (KILL n [MINE])	11-13
11.9.8.6	L (LIST [MINE])	11-14
11.9.8.7	R n (READ n [MINE])	11-14
11.9.8.8	S callsign (SEND callsign)	11-14
11.9.8.9	V (VERSION)	11-14
11.9.8.10	? (HELP)	11-14
11.10	Pactor and Packet MailDrop operation	11-14
11.11	Pactor Switching Time Considerations	11-15
11.11.1	Suggested Pactor Operating Settings	11-15
11.11.2	Possible Areas For Pactor Performance Improvement	11-15

APPENDICES

APPENDIX A PK-232 COMMAND SUMMARY

APPENDIX B PK-232 SCHEMATIC DIAGRAM

APPENDIX C PK-232 PARTS PICTORIAL

APPENDIX D PK-232 PARTS LIST

APPENDIX E SPECIFIC RADIO CONNECTIONS

CHAPTER 1

INTRODUCTION

1.1 Overview

The PK-232 was designed to provide a complete digital operating position when coupled with a Personal Computer or Computer Terminal. The PK-232 couples your HF or VHF (or both) voice transceivers to your computer or terminal so you can use its keyboard and display to "talk" to other Amateurs.

1.1.1 Capabilities

The PK-232 allows you to transmit and receive all legal Amateur digital modes that are popular on both HF and VHF. In addition you can send and receive black-and-white Weather FAX. The PK-232 can receive other modes such as TDM, NAVTEX and bit-inverted Baudot RTTY. These capabilities together with SIAM (Signal Identification and Acquisition Mode) make the PK-232 ideal for the digital signal Short Wave Listener as well.

The PK-232 with your Computer or Terminal allows you to transmit and receive the following modes:

- AX.25 Packet, both HF and VHF (Chapter 4)
- Packet MailDrop Operation (Chapter 5)
- Baudot and ASCII RTTY (Chapter 6)
- AMTOR/SITOR CCIR Rec. 476 and 625 (Chapter 7)
- Morse Code (Chapter 8)
- HF Weather FAX (Chapter 9)
- Pactor (Chapter 11)

In addition the PK-232 receives the following modes:

- NAVTEX marine broadcasts (Chapter 7)
- TDM (Time Division Multiplex) signals (Chapter10)
- Bit-inverted Baudot RTTY (Chapter 10)

The PK-232 also has the following special features:

- SIAM for SWLing (Chapter 10)
- PakMail Packet/AMTOR/Pactor * MailDrop Message Handling
- KISS mode for TCP/IP and special Packet applications
- HOST mode for Host application programs

1.1.2 Included Components

Your PK-232 Data Controller package contains the following items:

- One PK-232 Data Controller
- PK-232 Operating Manual (this manual)
- Cables to connect your PK-232 to two separate radios
- Connector package to help setup your PK-232
- RS-232 Serial Cable with DB-25 connectors (pins 1-8 and 20)

1.2 Computer or Computer Terminal Requirements

You will need a Computer or Computer Terminal to "talk to" or control your PK-232. If you are using a Computer, you will need a Communications Program or Terminal Program as it is sometimes called. The most popular computers are the IBM-PC and its compatibles, the Apple Macintosh and the Commodore-64/128. These computers can all be made to work with the PK-232.

Timewave has terminal programs for IBM PC compatible computers using Windows 3.1 and Windows 95/98/NT operating systems. If you other types of computer or operating systems, you must supply your own terminal program.

The Computer or Computer Terminal you plan to use must have an RS-232 Serial Communications port. You will also need a Communications Program that allows your computer to communicate over the RS-232 port using the ASCII character set. Details for connecting many computers can be found in Chapter 2 of this manual.

1.3 Station Requirements

We presume that you already have an operating radio transceiver or Short-Wave receiver to which you will connect your PK-232. In the Amateur bands most of the VHF activity occurs on the 2-meter FM band, while most of the HF activity occurs on the 20-meter band. An HF receiver or transceiver must be capable of SSB operation. While no specific brand of transceiver is required, we recommend that a modern transceiver (built in the last 20 years) capable of operation on one of the two frequency bands mentioned above be used. Specific transceiver connections are described in Chapter 3 of this manual.

1.3.1 System Transmitter-Receiver Performance Requirements

Most modern radio transceivers are capable of excellent performance in Morse, Baudot and ASCII RTTY, AMTOR and packet radio. Although AMTOR Mode A (ARQ) operation imposes more demanding switching speed requirements than the other operating modes, most radios will operate in both AMTOR modes without any modifications. Radio switching times are less critical in packet radio operation. See the AMTOR operating section for further details on timing requirements.

Your PK-232 provides software-controlled timing variations that permits operation with nearly all the HF and VHF/UHF radios in general use today.

1.4 PK-232 Specifications

As part of its program of product improvement, AEA reserves the right to make changes in this product's specifications. Changes may also be made to the information in this document and incorporated in revisions to this manual. Prices and specifications are subject to change without notice or obligation.

1.4.1 Modem Characteristics

Demodulator:	Limiter-discriminator type, preceded by an eight-pole Chebyshev 0.5-dB ripple bandpass filter
Receive Band-pass:	Automatically switched by operating mode
VHF packet:	Center frequency 1700 Hz, bandwidth 2600 Hz
HF (except CW)	Center frequency 2210 Hz, bandwidth 450 Hz
CW	Center frequency 800 Hz, bandwidth 200 Hz
Modulator:	Low-distortion AFSK sine wave function generator, phase-continuous AFSK
Output Level:	5 to 100 millivolts RMS into 600 Ohms, adjustable by a rear-panel control

1.4.2 Processor System

Protocol conversion:	Zilog Z-80 microprocessor
RAM:	32 kilobytes
ROM:	Up to 128 kilobytes of ROM may be used
Hardware HDLC:	Zilog 8530 SCC

1.4.3 Input/Output Connections

Radio Interface:	Two five-pin Molex connectors, selectable on the front-panel
Input/Output Lines	Receive audio Transmit audio +/- Push-To-Talk (PTT) (+25 / - 40 VDC) External squelch input Ground
External modem connector	Five-pin Molex- TXD, RXD, DCD, PTT and Ground (TTL levels)
Direct FSK Outputs	Normal and reverse
Oscilloscope Outputs	Mark (Stop) and space (Start)
CW keying Outputs	Positive: +100 VDC max, at up to 100 mA Negative: -30 VDC max, at up to 20 mA
Terminal Interface:	RS-232-C 25-pin DB25 connector
Input/Output	RS-232-C with full handshake (hardware and software) USE WIRES 1 THROUGH 8 AND 20 ONLY.
Terminal Data Rates	Autobaud selection of 110, 300, 600, 1200, 2400, 4800 and 9600 BPS. TBAUD COMMAND adds 150, 200 and 400 BPS.

1.4.4 Controls and Indicators

Front Panel Controls:	Power Switch Radio Selector Switch Threshold Adjust Potentiometer
Indicators:	Ten-segment discriminator-type bargraph indicator for HF tuning. DCD LED (Data Carrier Detect)

Status and Mode Indicators:

Mode Group	Status Group
BAUDOT	STBY
ASCII	PHASE
PKT	IDLE
MORSE	ERROR/CONV
SELFEC	OVER
FEC	TFC/TRANS
ARQ	RQ/CMD
MODE L	CON
STBY	STA
	MULT
	SEND

1.4.5 General

Power Requirements:	+13 VDC (12 to 16 VDC) at 800 mA
Mechanical:	Overall, 11" x 8.25" x 2.5" (279.4 mm X 209.6 mm X 63.5 mm) Weight 3 pounds (1.36 kilograms)

CHAPTER 2

COMPUTER INSTALLATION

2.1 Overview

In this chapter we will connect the PK-232 to the RS-232 Serial port of your Computer or Computer Terminal. After the Serial connection has been made we will perform a quick check of the PK-232 internal software. Finally we will check the PK-232's internal modem by performing a Packet "loop-back" test. When you have completed this chapter, you will be ready to connect the PK-232 to your receiver or transceiver and begin using it on the air.

2.1.1 Equipment Required

You will need the following for this chapter:

- your PK-232 Data controller;
- a 13.6-volt DC, 1-amp (or greater) regulated power supply such as those sold by Radio Shack (or an AEA AC-4);
  (the power supply must be able to supply at least 12 VDC to the PK-232 while it is operating under load)
- the included PK-232 DC power cord unless the AC-4 is used;
- your Computer or Computer Terminal;
- a Communications or Terminal Emulation program for your computer;
- the included RS-232 cable with 25-pin "D" connectors on each end;
  (do not use a 3rd-party RS-232 cable with more than pins 1-8 and 20 connected)
- one of the included 5-pin shielded "Radio cables";
  (note that the radio cables may arrive as a single 10-ft. cable which should be cut in half producing two 5-ft. cables.
- wire cutters and strippers or a small pocket knife, a small straight-blade screwdriver and a medium phillips-head screwdriver.

2.2 Unpacking the PK-232

Carefully remove the PK-232 from the box and its plastic bag. Inspect the unit for signs of damage that may have occurred in shipping. If there is visible damage, please contact the dealer or shipper. Do not attempt to install or use a damaged PK-232.

We will be discussing some of the Controls, Indicators and Connections in this installation so take a few moments to familiarize yourself with them. The figures on the next pages may help with their locations.

2.2.1 Connecting Power

MAKE SURE YOUR POWER SUPPLY IS OFF AND UNPLUGGED BEFORE WIRING

- Locate the PK-232 Power Cable in the accessory bag. Strip off just enough insulation from the ends to connect it to your 12-14 Volt DC regulated power supply.

- The Center pin of the coaxial power plug is POSITIVE. Connect the lead with the White stripe to the POSITIVE (+) lead on your power supply. Check this with an Ohm-meter if you have one.

- Connect the solid Black (GROUND) lead to the NEGATIVE (-) lead of your power supply. (The AEA AC-4 Wall Transformer is already wired correctly.)

- Connect the Coaxial power plug to the 13 VDC Power Receptacle on the left rear of the PK-232. DO NOT CONNECT YOUR COMPUTER YET.

- Plug in your power supply or AC-4 and turn on power. Turn on the PK-232 by depressing the Power Switch on the front of the unit. WATCH CLOSELY FOR THE FOLLOWING:
  At power-on the four LEDs on the left of the PK-232 should light for 1 second and the BAUDOT LED should then light and remain lit.

  If this occurs, then switch OFF the PK-232 and move on to section 2.3.

If no LEDs light then re-check the above steps to insure that 12-14 VDC is available at the power plug and the center pin is POSITIVE.

If any LEDs other than the BAUDOT LED light then the PK-232 has probably been initialized. If the PK-232 has been initialized it is ready to communicate with a computer or terminal at a specific baud rate (probably 300, 1200, 2400, 4800 or 9600 bits/sec). If you know what this baud rate is then you should continue with the installation at section 2.3 keeping this in mind.

If you do not know what baud rate the PK-232 has been initialized to then you should remove the Lithium battery jumper JP1 from the Berg posts which will reset the PK-232. To do this, do the following:

- Disconnect power and all cables from the PK-232 and turn the unit upside down.

- locate the hole immediately behind the RADIO-1/RADIO-2 switch.

- With needle-nose pliers or a tweezers gently lift the shorting jumper up off the Berg Posts.

- Wait approximately 2 minutes to insure that the memory has "forgotten" the old parameters.

- Carefully replace the jumper over the posts.

If the above did not restore proper operation of the PK-232 front-panel LEDs, then contact Timewave Technical Support Department as described in the front of this manual.

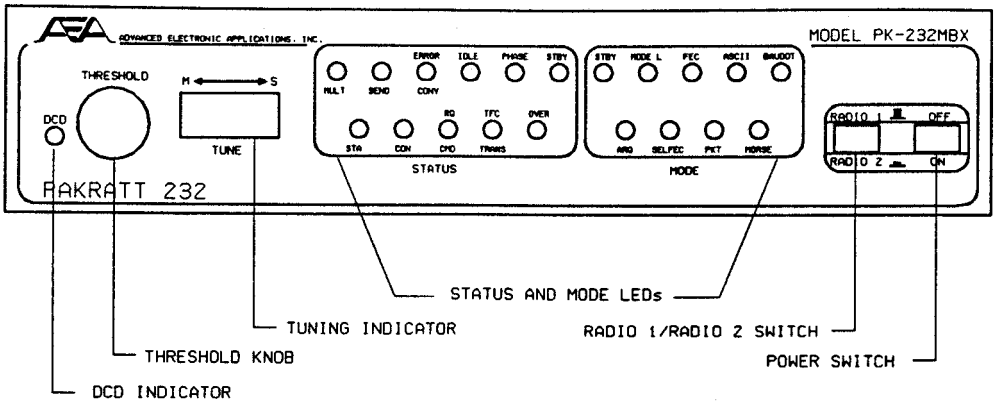

Figure 2-1 PK-232 Front Panel Controls and indicators

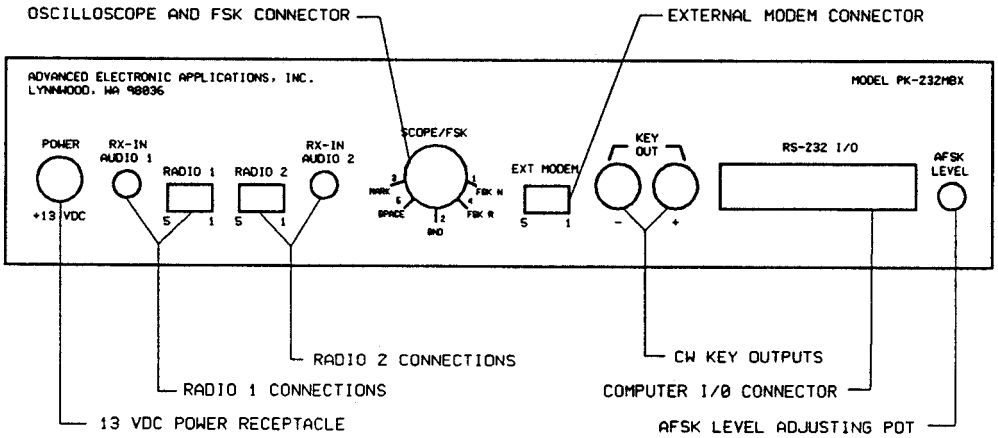

Figure 2-2 PK-232 Rear Panel Connections and Controls

2.3 Connecting Your Computer or Computer Terminal

MAKE SURE THE PK-232 AND YOUR COMPUTER ARE SWITCHED OFF

- Locate the PK-232 Serial Cable. Connect the 25-pin Male connector to the RS-232 I/O connector on the rear of the PK-232. If you are not using an AEA RS-232 cable, make sure that the cable you are using has no other pins than 1-8 and 20 connected.

- Connect the other end of this cable (Female DB-25) to the RS-232 Serial Port of your personal computer or Computer Terminal. Details on connecting to common machines are listed below.

NOTE: This cable was designed to connect directly to a 25-pin IBM-PC compatible RS-232 port. Many machines on the market today support this configuration. Some less-common machines are listed in section 2.6. Please make certain you have properly connected the PK-232 to your RS-232 computer or Computer Terminal then proceed to section 2.4.

2.3.1 IBM-PC/XT/AT and Compatibles

IBM compatible 25-pin RS-232 serial ports should connect directly to the supplied serial cable. Some IBM compatible machines are equipped with a 9-pin serial port. For these machines a DB-9 to DB-25 adapter should be obtained from a Radio Shack store or a computer dealer.

2.3.2 Apple Macintosh Series of Computers

Timewave does not sell a terminal program for Apple computers. A few third-party programs are available and can be found by searching the World Wide Web.

2.3.3 Computer Terminal

If you have an RS-232 Computer Terminal, sometimes called a Dumb-Terminal, Smart-Terminal or ASCII-Terminal, you may need to change the gender of the cable provided with your PK-232. This can be accomplished with an inexpensive double-male RS-232 gender changing adapter available from Radio Shack and other computer dealers. The Radio Shack part number is 26-243.

2.4 Setting Up Your Communications or Terminal Software Program

If you will be using your PK-232 with a Computer, you will need to read parts of this section to set up your Communications or Terminal Program Software. If you will be using your PK-232 with a Computer Terminal you will not need any software and may skip to section 2.5.

Setting up a Communications program for your PK-232 is very important.

How your screen looks when you use your PK-232 depends completely on your Communications program. AEA currently makes available programs for the IBM-PC and compatibles, the Apple Macintosh and the Commodore 64/128 computers. These products are customized for radio communications and are available at extra cost from your AEA dealer.

The PK-232 operates in much the same manner as a telephone modem and most telephone modem Terminal Programs will control a PK-232 quite nicely. Some of these programs are "Public Domain" which means they are FREE. Other Terminal Programs are "Share-ware" which means you may get them from a friend and try them before you buy them. Whether you are using an Timewave program or one of your own choosing, see the section below for the particular type of computer you plan to use.

2.4.1 Terminal Programs for IBM PCs and Compatibles

Although you can use almost any terminal program with your IBM compatible, Timewave recommends PK-TERM for Windows from CSS (www.cssincorp.com) which provides many features not available in "telephone modem" programs.

If you already have the a Timewave terminal program, follow the program

manual and install the software on your computer. You should also read through the PACKET OPERATION chapter of the manual. Familiarity with Packet operation will be necessary for performing a quick-check of the PK-232 in section 2.5 of THIS manual.

As we mentioned above, an AEA program is not required to use the PK-232. Many terminal programs can be found throughout the amateur radio community or can be downloaded from the internet.

A partial list of PC programs for the PK-232 includes:

XPWin, PROCOMM, CROSSTALK-XVI, SMARTCOM, RELAY, BITCOM, QMODEM, PC-TALK, CTERM, HAMCOM, PACKCOMM, PACKTALK, HAMPAC, LANLINK, MSYS, YAPP and the terminal program included with Microsoft Windows 3.0 (tm) and Hyperterminal included with Windows 95/98.

Follow the installation directions that come with the Terminal program you wish to use. Once installed on the computer, you should start the program and set the communication parameters for the following:

Data Rate = 9600 bits per second
Data bits = 8
Parity = none
Stop bits = 1

Once these settings have been achieved and the correct serial communications port chosen, you may proceed to section 2.5.

2.4.2 Terminal Programs for the Apple Macintosh

Although you can use almost any terminal program with your Macintosh, AEA used to sell the MACRATT with FAX program which provides many features not available in "telephone modem" programs. You may be able to buy a used copy of MACRATT at a hamfest or on the internet.

If you already have the MACRATT program, please follow the program manual and install the software on your computer. You should also read through the PACKET OPERATION chapter of the MACRATT manual. Familiarity with Packet operation of MACRATT will be necessary for performing a quick check of the PK-232 in section 2.5 of THIS manual.

As we mentioned above, an AEA program is not required to use the PK-232. Many terminal programs can be found throughout the amateur radio community and can be downloaded from yhr internet.

A partial list of Macintosh programs for the PK-232 includes:

MAC TERMINAL, RED RYDER, MICROPHONE, SMARTCOMM II and MOCK TERMINAL

Follow the installation directions that come with the Terminal program you wish to use. Once installed on the computer, you should start the program and set the communication parameters for the following:

COMPATIBILITY:
1200 bauds, 7 bits/character, even parity, Handshake XON/XOFF, FULL-DUPLEX, Modem connection, "telephone" port.

Once these settings have been achieved, proceed to section 2.5.

2.5 System Startup and Loop-back Test

Make sure that you have connected your PK-232 to a 12-14 Volt DC power source and to the RS-232 port of your computer or Computer Terminal. If you are using a computer, you must also have a communications program and be familiar with its operation. You are now ready to begin the following PK-232 Startup and Loop-back check-out procedure.

1. Don't connect any cables to your radio yet!

2. Set the front-panel RADIO-1/RADIO-2 switch to RADIO-1 (out).

3. Remove one of the 5-wire shielded Radio Cables from the PK-232 accessory bag. If you have a single 10-Ft. cable with 5-pin connectors on each end, it should be cut in half.

4. With your pocket knife or wire strippers, remove about an inch of cable jacket exposing the five colored wires and the shield-wire.

5. Strip about 1/4 inch of insulation from the GREEN and WHITE wires. Short the GREEN and WHITE wires together by twisting gently.

6. Plug this Radio Cable into the 5-pin RADIO-1 socket on PK-232's rear panel. Make sure that the cable exits the PK-232 downward.

7. Set the AFSK level on the right-rear of the PK-232 to 50% rotation (straight up and down) using a small screwdriver.

8. Turn on your computer. Load and run your communications program.

   If you are using Timewave program, follow the program instructions to enter the Packet mode, then skip to step 11.

   If you are using another Terminal Program or a Computer Terminal, Set your computer's terminal program to:

   - 1200 bauds (if available);
   - seven-bit word;
   - even parity;
   - one stop bit.

NOTE: You may use other terminal baud rates with the PK-232 - we recommend 1200 baud here to keep this procedure easy and consistent.

9. Press the PK-232's power switch to the ON position.

   The four LEDs clustered at the left side of the panel will light

   briefly and then the BAUDOT LED will light. If any other LEDs light, the PK-232 has been previously initialized. If you know the terminal baud rate the PK-232 has been set to, you may proceed to step 11; otherwise you must remove the JP1 battery jumper as described in section 2.2.1 before you proceed.

   If your serial port is operating at 1200 bauds as we recommend, you'll see the "autobaud" message:

   Please type a star (*) for autobaud routine.

   If your serial port is operating at 300, 2400, 4800 or 9600 bauds, you may see some "garbage" characters.
   This is normal and you should proceed with step 10.

10. Type an asterisk (*). When the PK-232 has "recognized" your computer's data rate, the CMD and PKT LEDs will light. Your screen will then display the sign-on message:

```
PK-232M is using default values.

AEA PK-232M Data Controller
Copyright (C) 1986-1990 by
Advanced Electronic Applications, Inc.
Release DD.MMM.YY
cmd:
```

Make note of the firmware Release date on the first page of this manual. This is important should you ever need to call AEA for technical support.

11. If you are using an AEA program, follow the instructions in the program manual to enter the packet callsign (MYCALL) of AAA into the PK-232. Even though this is not your callsign, please do this for this procedure. You must change it to YOUR OWN CALLSIGN following this procedure.

    If you are using a Computer Terminal or a non-AEA terminal program the following will set your packet callsign to AAA:

    Enter MYCALL by typing MY AAA <Enter> (or <RETURN>).
    (<RETURN> or <Enter> means type the single key on your keyboard.)
    Your monitor should display:

    ```
    MYcall   was PK232
    MYcall   now AAA
    ```

12. Turn the front-panel THRESHOLD control fully CounterClockWise (CCW) and notice that the DCD LED is not lighted. Then turn the THRESHOLD control fully ClockWise (CW) - the DCD LED should now light. Adjust the THRESHOLD until the DCD LED just goes out. This should occur between the 2-o'clock and 4-o'clock position.

13. If you are using an AEA program follow the instructions to CONNECT in packet mode to AAA. Since you have just entered your callsign as AAA, you will connect to yourself.

    If you are using a Computer Terminal or a non-AEA program, entering the following after the "cmd:" command mode prompt will cause the PK-232 to Connect to AAA:

    C AAA <Enter>

    After a few moments, your monitor should display:

    ```
    *** CONNECTED to AAA
    ```

14. Type HELLO SELF <Enter>
    After a few moments, your monitor should echo the same message.

    If you have gotten this far then the digital section of the PK-232 and the VHF modem are both working.

15. We will now check the PK-232s HF modem. If you are using an AEA program, follow the instructions to select the HF modem by turning

    the VHF Parameter OFF, then set the radio baud rate HBAUD to 300.

    If you are using a Computer Terminal or a non-Timewave terminal program, the following will setup the HF mode of the PK-232:

    Type <CONTROL-C>. (Type C while pressing the <Ctrl> key down.)
    Your monitor should respond with the command prompt:

    ```
    cmd:
    ```

Then enter VHF OFF <Enter>
Your monitor should respond with:

```
Vhf    was ON
Vhf    now OFF
cmd:
```

16. We now must change the Radio data-rate (HBAUD) to 300 Baud for HF operation. If you are using a Computer Terminal or a non-Timewave

    terminal program the following will select a PK-232 HBAUD of 300:

    Enter HB 300 <Enter>
    Your monitor should respond with:

```
HBaud    was 1200
HBaud    now 300
cmd:
```

17. If you are using an Timewave program type HELLO SELF <Enter>
    Your monitor should soon echo the message you've just typed.

    If you are using a Computer Terminal or a non-Timewave terminal program, you must first type CONV or K followed by a <Enter>. Now you may type a few characters. Your monitor should soon echo the characters you've just typed.

18. If you are using an Timewave program, follow the instructions to DISCONNECT from a Packet station.

    If you are using a Computer Terminal or a non-Timewave terminal program the following will cause the PK-232 to DISCONNECT:

    Enter <CONTROL-C>
    Your monitor should respond with the command prompt:

```
cmd:
```

    Enter D <Enter>
    Your monitor should respond with:

```
cmd:*** DISCONNECTED: AAA
AAA*>AAA (UA)
```

If all of the above steps were successful, you've completed the system quick-check and are ready to proceed to Chapter 3. In Chapter 3 you will connect your PK-232 to your radio and begin using it "on the air".

If you have problems with the steps shown above, go back to Step 1 AFTER checking all cables and connectors. Read each step again carefully. The most common problems are trying to connect to a call different from AAA, leaving the DCD LED on which inhibits transmit, not having the green-and-white wires connected, or not setting the AFSK level to 50% rotation.

If you still have problems, leave your PK-232 ON and contact Timewave's

Technical Support Department as suggested in the front of this manual.

2.6 Detailed RS-232 Connections for Other Computers

If the type of computer you plan to use with the PK-232 was not mentioned in the beginning of this chapter, you may find specific connection information in the sections below. You will also need a Communications program to use with your computer which AEA can not provide. See section 2.7 for information regarding Communication programs for many of these machines.

Many computers require a serial port adapter card that incorporates the necessary RS-232-C interface circuitry. The IBM-PC and Apple II series of computers are good examples of this.

Computers that do not have a serial port or do not permit use of a suitable adapter or level converter cannot be used with the PK-232.

2.6.1 Other Computers with RS-232-C Ports

If your computer has an RS-232 port, consult your computer manuals to see which pins are used for Transmit-Data, Received-Data and Signal-Ground. Read the manufacturer's recommendations for connecting the serial port to a modem and connect your PK-232 in the same way.

Your PK-232 is configured as Data Communications Equipment (DCE) which receives data on pin-2. Most computers and terminals are configured as Data Terminal Equipment (DTE) transmitting data on pin-2.

- If your computer is configured as DTE:

  Use the supplied RS-232 cable with a Gender changing adapter if necessary. These are available from Radio Shack (Part # 26-243) and other computer stores.

- If your computer is configured as DCE:

  Wire pin 2 of the PK-232 to pin 3 of the computer connector.
  Wire pin 2 of the computer connector to pin 3 of the PK-232.
  Wire pin 7 to pin 7.

- As a default the PK-232 provides XON/XOFF software flow-control to the computer or terminal. The command XFLOW can be turned OFF to disable software flow control and enable hardware handshake if your computer requires it. Hardware flow control is achieved with RTS/CTS (pins 4 and 5) of the DB-25 RS-232 I/O connector.

2.6.2 Other Computers with Non-Standard Serial Ports

Computers with non-standard serial ports must meet the following conditions:

- The signal levels must be compatible with RS-232-C. The PK-232 requires the voltage levels from the computer be greater than +3 volts in the "asserted" state and 0 volts or less in the "non-asserted" state.

- The signal polarity must conform to the RS-232-C standard. The 0 or negative-voltage state must correspond to logical "1" and the positive-voltage state to logical "0."

- The computer must be able to correctly receive a signal that meets asynchronous RS-232-C specifications. The PK-232 supplies signals that meet this specification.

Make or buy a cable that provides the following connections:

- The computer's serial port signal ground or common pin must be connected to the PK-232's serial port connector pin 7.

- The pin on which the computer SENDS data must be connected to the PK-232's connector pin 2.

- The pin on which the computer RECEIVES data must be connected to the PK-232's connector pin 3.

If your computer requires any other signals, you must arrange to provide them. The PK-232 has the standard hardware handshake lines available. As a default the PK-232 provides XON/XOFF software flow control to the computer or terminal. The command XFLOW can be turned OFF disabling software flow control and enabling hardware handshake if your computer requires it. The documentation provided with your computer or serial card should clarify any special requirements.

2.7 Terminal (Modem) Software for Other Computers

Any communications program that enables your computer to emulate or act as an ASCII terminal with a telephone modem should work with your PK-232. If you have a familiar program you have used successfully, use it to communicate with your PK-232.

CHAPTER 3

RADIO INSTALLATION

3.1 Overview

This chapter describes how to connect the PK-232 to your radio receiver or transceiver. To receive digital transmissions you must connect the receiver audio and Ground to your PK-232. To transmit you will have to add connections to the microphone or low-level transmit audio and to the Push-To-Talk (PTT) circuit of your transceiver.

The most convenient way to connect your transceiver is through a rear panel ACCESSORY Connector (if your transceiver has one). You may also use the Microphone connector if you prefer. MAKE SURE THAT YOU REMOVE POWER FROM THE PK-232 AND YOUR RADIO BEFORE MAKING ANY CONNECTIONS.

3.1.1 Equipment Required

You will need the following for complete transmit/receive connections:

- your PK-232 Data Controller, computer or Computer Terminal and software as discussed in Chapter 2 of this manual;
- Timewave-supplied shielded cable for each radio you wish to connect;
- your radio and its power supply;
- microphone or accessory-plug connector(s) required by your radio;
- soldering iron and solder if the radio connectors require it;
- wire cutters and strippers and/or a small pocket knife;

3.2 Receive-Only Radio Connections

If you are a Short Wave Listener (SWL) or only interested in receiving signals, the connections to the PK-232 are simple. Even if you are planning on transmitting and receiving, you may initially want to just receive to become familiar with the PK-232. Taking a little time to tune in and "read the mail" is an excellent way to get acquainted with the various modes before going on the air.

For receive operation, only the audio from the receiver or transceiver (and Ground) needs to be connected to the PK-232. This can be accomplished with the included 3.5 mm audio cables. Plug one end of the audio cable into RX-IN AUDIO 1 or AUDIO 2 jack on the rear of the PK-232 as shown in figure 3-1 below. The other end of this cable should be connected to the External Speaker/Earphone jack on the radio you will be using.

NOTE: Some Short Wave receivers come with low-level outputs designed for use with a tape recorder. These outputs typically do NOT have enough level to drive the PK-232.

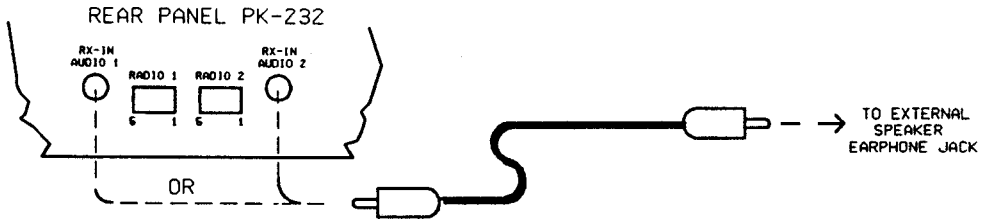

Figure 3-1 Receive audio connection to the PK-232.

If you are using an HF transceiver or Short-Wave receiver you should consult Chapter 10 for information on the Signal Identification mode. Chapters 4, 6, 7, 8 and 9 talk specifically about some of the modes you may encounter on the HF and Short-Wave bands.

If you are connecting to a VHF scanner or VHF/UHF transceiver you should look over Chapter 4 on Packet operation.

3.3 Transmit and Receive Radio Connections

To connect your PK-232 to a HF or VHF TRANSCEIVER you will need access to the Receive-Audio, Transmit-Audio (mic-audio), Push-To-Talk, Ground and optionally a Squelch input for shared voice/data channels. Most of these signals are typically available on the Microphone connector and also often on a rear-panel Accessory connector of the transceiver.

If you will be wiring the PK-232 to more than one radio, repeat the procedures below in sections 3.3.5 for each radio you will connect.

3.3.1 Transceiver's Microphone or Accessory Connector?

The most convenient way to connect your transceiver is through a rear panel Accessory connector if one is available. If the PK-232 is connected as an accessory, the microphone used for voice operation can sometimes be left connected to the transceiver. This makes changing between voice and data modes easier than if the microphone must be unplugged in order to connect the PK-232. On most HF radios however, the mic is "hot" and should be unplugged during data operation.

3.3.2 Connections for Specific Transceiver Models

APPENDIX E of this manual contains information and diagrams for connecting the PK-232 to many modern HF and VHF transceivers. Please turn to APPENDIX E and locate the transceiver model you will be connecting to your PK-232. If you do not find the exact model of your transceiver in APPENDIX E, then locate a model from the same manufacturer that has the same Accessory or Microphone connector as the unit you will be connecting.

3.3.3 Check Your Transceiver's Operating Manual

Locate the Operating Manual for your transceiver and turn to the page describing the connector to which you will attach your PK-232. Even if you found the exact model of your transceiver in APPENDIX E, it is a good idea to verify that your transceiver's manual agrees with the information in the appendix. If the information does not agree, or you could not find the exact transceiver model in APPENDIX E, then you should use the information contained in your transceiver's manual to connect the PK-232.

3.3.4 Specific Connection Points

Whether you are connecting an HF Single Side Band transceiver for RTTY/FAX operation, or a VHF/UHF transceiver exclusively for packet, the minimum connections to your transceiver will be almost identical. HF transceivers have a few optional connections that will be covered after the basic connections have been made.

The following table and figure will be helpful in identifying the proper basic connection points to the PK-232 radio cable.

Pin	Signal Name	Wire Color	Description
1	Receive audio	Green	Audio from receiver to PK-232
2	Microphone audio	White	AFSK from PK-232 to transmitter
3	Squelch input	Black	Optional squelch input from radio
4	Ground	Brown	Audio and PTT common return
5	Push-To-Talk	Red	PK-232 keys transmitter
	Shield/Drain Wire	Silver	Shield of cable / Microphone Ground

Table 3-1 J4 and J6 Radio Port and Cable Connections

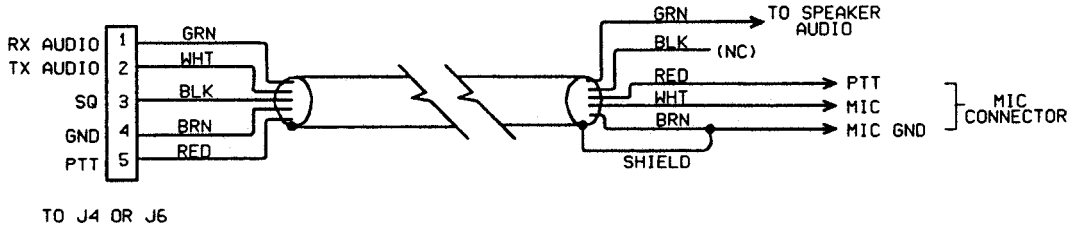

Figure 3-2 PK-232 to Radio Cable Connections

3.3.5 Begin Assembling your Radio Cable

Assemble all the tools, PK-232 Radio cable and connectors you will need for each radio you wish to connect. You will probably also need a small soldering iron (20-40 watts) and solder at your work area.

3.3.5.1 Prepare the Radio Cable

1. Locate one of the 5 ft. PK-232 radio cables included with your PK-232. Note that the Radio cables may have been shipped as a single 10 ft. cable which should be cut in half before use.

2. Prepare the bare end of one of the radio cables by removing an appropriate amount of the jacket for the connector you will be attaching. Usually this is 1/2 to 3/4 inch.

3. Carefully remove the foil shield exposing the colored wires underneath. Be careful not to nick or cut the shield wire.

4. Strip back 1/8 inch of colored insulation from the GREEN, RED, WHITE and BROWN wires.

NOTE: The BLACK wire is the squelch input and normally not used. The black wire is only needed for Packet operation if the channel you plan to operate on is used for both voice and data. If you need this connection, strip away 1/8 inch of BLACK insulation as done with the other four wires. If this wire is not needed, then leave the insulation intact.

3.3.5.2 Verify the Connection Points with Your Manual

Look at the connector closely (with a magnifying glass if necessary) and locate pin 1. Compare this to the location of pin 1 on the connector drawing in your transceiver's manual and also in APPENDIX E.

This is important as some diagrams show the connector from the inside of the transceiver, not the outside of the plug you are wiring. This will help insure that the plug is not wired backwards.

3.3.5.3 Prepare the Connector

Now that the cable is prepared, you are ready to prepare the connector for wiring. If the connector you are wiring has a shell, be sure that it is placed over the cable before any connections are made. If this is not done, an otherwise perfect wiring may have to be redone.

3.3.5.4 Wire the Connector

The following connections must be made for transmit and receive operation of the PK-232. Refer to table 3-1 and figure 3-2 as well as APPENDIX E and your transceiver's manual when making these connections.

HINT: When wiring a Connector, it is often easier to wire the inside or middle connections first and work your way to the outside pins. For this reason the following steps are not numbered and may be done in any convenient order.

- Connect the Shield/Drain wire (Silver wire with no insulation) to the Microphone GROUND connection if your transceiver has one. If your transceiver does not have a separate Microphone or Audio-In Ground connection, then this wire should connect to the single Ground along with the Brown wire. See the next step.

- Connect the BROWN wire to the main GROUND on the connector. This Ground is the one used for the PTT and receive audio. You should connect the Silver Shield/Drain wire to this GROUND only if there is not a separate Microphone Ground as described in the previous step.

- Connect the RED wire to the Push-To-Talk (PTT) terminal on the connector. At this time, check the manual to determine whether your transceiver uses positive (+) or negative (-) PTT. The PK-232 comes from the factory set for Positive PTT since most transceivers use this method of keying. This will be discussed in more detail in the Adjustment sections below. If you are connecting a Handheld transceiver to your PK-232, you will probably need a resistor and/or capacitor to isolate this connection from the AFSK audio. Check APPENDIX E.

- Connect the WHITE wire to the MICROPHONE AUDIO terminal on the connector. This connection carries the low to medium level Audio Frequency Shift Keying (AFSK) to the transmitter's microphone audio section. If you are connecting a Handheld transceiver to your PK-232, you will probably need a resistor and/or capacitor to isolate this connection from the PTT. Check APPENDIX E.

- Connect the GREEN wire to the RECEIVER AUDIO terminal on the connector. If the connector you are wiring does not have receiver audio available, then the included 3.5 mm Audio Cable may be used. This cable connects audio from your transceiver's external speaker/earphone jack to the RX AUDIO IN Jack on the PK-232. For the PK-232 to operate properly, we recommend at least 200 mV RMS of receive audio be available. If you are connecting to an Accessory Jack, make sure the available level is at least 200 mV RMS. For CW work 400 mV may improve operation.

- If you will be using a Packet Radio channel that is shared with voice users then you should connect the BLACK wire to the SQUELCH status pin of the connector. This will prevent the PK-232 from transmitting when there is a received signal strong enough to open the Squelch. If you connect this pin you may have to change the setting of the SQUELCH command in the PK-232. Most VHF/UHF Packet are no longer shared with voice users so this connection will probably not be needed.

This completes the minimum necessary connections for transmit and receive operation with the PK-232. If you are interested in using the PK-232 to transmit Morse code (CW) or transmit RTTY using FSK inputs on your HF transceiver, the following three sections (3.3.6, 3.3.7, and 3.3.8) should be read.

If you will not be using any of the connections described in the following sections, then skip ahead to the Final Adjustment section 3.4 where you will set levels and prepare to go "On the Air".

3.3.6 Wiring Your HF Transceiver for Direct CW Keying

The PK-232 can directly key CW with HF and VHF multi-mode transceivers. This requires that a cable be wired from the CW KEY OUT jack on the PK-232's rear panel to your CW keying input of your transceiver. Refer to the following instructions and Figure 3-3 below to wire the PK-232 side of the cable.

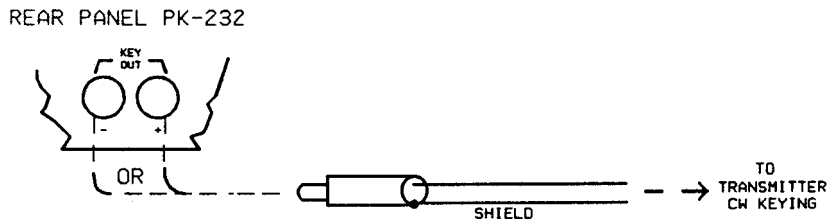

Figure 3-3: Direct CW Keying Cable diagram

1. Locate an RCA connector from the PK-232's accessory bag.

2. Locate some shielded audio cable from Radio Shack or other cable house and solder the RCA connector to the cable as shown above.

3. Locate the connector for the CW keying input to your transceiver.

   These are often supplied in your transceiver's accessory kit.

4. Wire the transceiver connector as per the instructions in your transceiver's manual for a "Straight key".

Consult your radio's instruction manual to determine if your radio uses negative (Grid Block) or positive keying polarity. Connect the shielded cable you just wired from the PK-232's positive (J9) or negative (J10) keying jacks to your radio's CW key input connector. See the Specifications on page 1-3 for maximum limits.

3.3.7 Connections for Direct FSK Operation on RTTY

Some HF SSB radios provide direct FSK (Frequency-Shift Keying) for RTTY operation. FSK operation can be an advantage when using RTTY and AMTOR modes and can sometimes help in HF packet operation. FSK operation may be especially helpful if your transceiver can switch in extra filters. Be cautious of a narrow filter as narrow filters can limit your data rate. Direct FSK is not always recommended for data speeds in excess of 110 bauds. Consult your transceiver's manual regarding direct FSK operation for further recommendations.

To install and operate your PK-232 and radio in the FSK mode:

1. Connect a shielded cable from the PK-232's J7 (DIN) receptacle, pins 1 or 4, to the radio's FSK input.

NOTE: Polarity of the FSK signals is not standardized by the radio manufacturers. We have observed that Icom radios most often use FSK, while Kenwood radios most often use FSKR. Consult your transceiver's manual to identify the proper polarity.

2. Connect the FSK lines from the PK-232 to your radio's FSK input in accordance with your radio's requirements.

   See Figure 3-4 below.

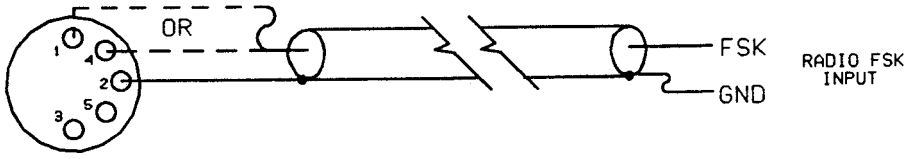

Figure 3-4 Connector J7 FSK Connections

NOTE: When using FSK, the same power and duty cycle limits apply as cited earlier for AFSK operation. Consult your radio's operating manual for any power or transmit time limits.

3.3.8 Connections for an Oscilloscope

Although the PK-232 has a built-in tuning bar-graph, you may also attach an oscilloscope for more precise tuning. Any low cost or surplus scope capable of the X-Y display of audio signals can be used.

Most station "Monitor Scopes" also have this feature.

- o Connect the oscilloscope to Pins 3 (mark) and 5 (space) on rear panel connector J7.
- o Connect the oscilloscope ground return to Pin 2 of J7.
- o See figure 3-5 below for connections to J7.

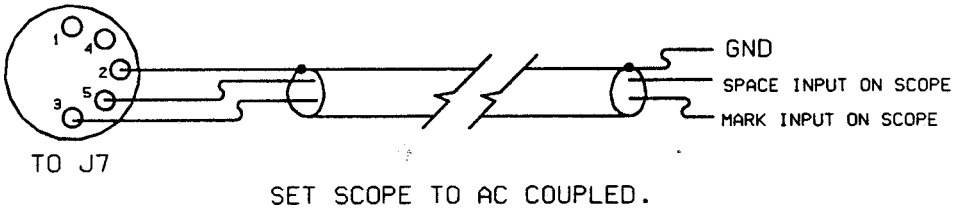

Figure 3-5 Connector J7 Oscilloscope Tuning Connections

NOTE: If your Oscilloscope cannot be AC coupled, you must place a 0.1 uf disc capacitor in series with your connections to both pin-3 and pin-5 of J7.

3.4 PK-232 Configuration Jumpers and Connections

Before operating the PK-232, you must first make sure it is correctly configured for your radio's PTT. After this has been checked you should then connect the cables you constructed in the above steps.

3.4.1 Push-To-Talk (PTT) Configuration

Before you connect the Radio cable(s) you just made to the PK-232, consult your transceiver's manual for Push-To-Talk keying polarity. Most transmitters and transceivers made in the last 15 years use Positive PTT keying. However some gear, especially if it contains vacuum tubes, may use a negative PTT keying voltage.

The PK-232 is configured for positive PTT at the factory so it will operate with most equipment without changes. However, if necessary, you can change the polarity of the PTT configuration on either or both RADIO1 and RADIO2 ports. Follow these steps:

- Remove four screws from the sides and two screws from the rear of the PK-232 chassis cover and lift off the cover.
- Locate Jumper posts JMP2 and JMP3 which are near the RADIO1/RADIO2 switch SW2.
- JMP2 configures the RADIO1 port and JMP3 configures RADIO2.
- When the shorting jumper is towards the front, the port is configured for Positive (+) PTT. When the shorting jumper is towards the rear, the port is configured for Negative (-) PTT.

NOTE: This is especially useful if you want to configure one radio port for positive PTT and the other for negative PTT.

Replace the cover and six screws when you are finished configuring the polarity of the PK-232 PTT circuit.

3.4.2 PK-232 Connections

Remove power from the PK-232, your transceiver and all accessories before making any connections.

Connect the Radio Cable(s) you constructed in section 3.3.5 between a Radio port on the PK-232 and your transceiver(s).

IMPORTANT NOTE

MAKE SURE THAT THE RADIO CABLES EXIT "DOWNWARD" FROM THE TWO RADIO JACKS ON THE REAR PANEL. ALTHOUGH NO DAMAGE WILL OCCUR FROM REVERSE CONNECTION, YOUR PK-232 AND RADIO WILL NOT OPERATE CORRECTLY!

If you wired cables for CW keying, Direct FSK or an Oscilloscope then connect these to the appropriate point on your equipment.

3.5 Transceiver Adjustments

This section is split into separate procedures for FM and SSB radios. If you are connecting an FM transceiver to one of the radio ports of the PK-232, then we recommend that you adjust this radio first. This will establish the AFSK level from the PK-232. If the only radio you will be connecting is an HF SSB transceiver, then skip the FM section and proceed directly to the HF SSB Adjustment section.

3.5.1 FM Transceiver Final Adjustments

1. Turn on your computer and PK-232 and start your terminal program.

2. Connect the radio to a dummy load such as the AEA DL-1500. Be prepared to monitor your transmissions with another nearby radio such as a handheld transceiver.

3. Verify that your PK-232 and FM radio are connected as shown in Figure 3-6 below.

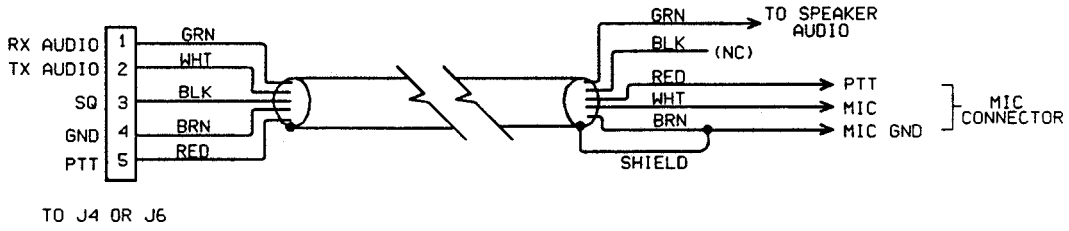

Figure 3-6 Radio-to-PK-232 Connections

4. If you are using a Timewave or AEA program such as PC-PAKRATT II, COM-PAKRATT or MACRATT, you must enter the Dumb Terminal mode to access the CALIBRATE Mode as described below.

5. Enter the Calibrate mode by typing: "CAL <Enter>."

NOTE: In the Calibrate mode only, the "K" key toggles the transmitter PTT line on and off. The "SPACE BAR" toggles the PK-232's tone generator from "Mark" (the lower pitched tone) to "Space" (the higher pitched tone). The PK-232 has a transmit watchdog timer circuit that unkeys your transmitter automatically after sixty (60) seconds. As you perform the following adjustments, unkey periodically, then rekey the transmitter by typing "K."

6. Press the "K" key on the keyboard to key the transmitter. You should hear a continuous tone in the monitor receiver.

7. Tap the space bar several times until the higher pitched of the two tones ("space") is heard.

9. With the PK-232 keying the transmitter and sending the higher of the two tones, adjust the transmit audio level as follows:

- Listen to the monitor receiver; turn the PK-232's rear-panel AFSK Output Level adjustment screw clockwise (CW) until you hear no increase in output level in the monitoring receiver.

- Rotate the AFSK Output Level adjustment screw counterclockwise (CCW) until the audio signal on the monitoring receiver is slightly but noticeably reduced from the maximum level.

10. Type "K" to return to receive mode.

11. Type "Q" to "Quit" (exit) the calibration routine.

You've now set your FM transmitter's deviation to an approximate level which will be adequate for initial operation.

12. With your radio in the receive mode, open the squelch control so that a steady hiss or noise is heard on a speaker.

13. Set the PK-232's THRESHOLD control to the "2 o'clock" position.

14. Set the receiver's volume control so the DCD LED on your PK-232 just lights with the receiver unsquelched. This is the approximate proper level for best receive performance from your PK-232's modem.

15. Reset your receiver's squelch control for normal operation.

3.5.2 SSB Transceiver Final Adjustments

Digital modes with an SSB radio require some different settings of the radio's operating controls for proper AMTOR and packet operation. Be sure to observe the following setting precautions:

- Set VOX to OFF.
- Set speech compression to OFF.
- Set AGC to FAST (if available).
- Disconnect the ALC cables between your SSB radio and any external RF amplifier you wish to use in AMTOR or packet radio service.

Remember - Baudot and ASCII RTTY and Mode B (FEC) AMTOR are continuous key-down conditions - Your radio's duty cycle is 100% for the duration of each transmission. If your SSB radio isn't designed for continuous full-power operation, you must operate your radio at reduced output power. Consult the manufacturer's specifications for details on the operating duty cycle.

NOTE: Make all connections with all power off.

1. Connect your PK-232 and SSB radio as shown in Figure 3-6.

2. Turn on your PK-232 and your computer and start your terminal program.

3. Connect your SSB radio to a dummy load such as the AEA DL-1500.

4. If your SSB radio has a "monitor" facility, i.e., an audio output that lets you listen to the audio signals entering the microphone or phone patch jacks, turn that monitor circuit on.

5. Set the radio's MODE selector to LSB (lower sideband).

6. Set the radio's meter switch to the "ALC" position. If the radio doesn't have an "ALC" indication, set the meter switch to "Ip" or "Ic" to read plate/collector current. If a current reading isn't available, set the meter to indicate power output.

7. If you are using an Timewave or AEA program such as PC-PAKRATT II,

   COM-PAKRATT or MACRATT, you must enter the Dumb-Terminal mode (see program manual) to access the CALIBRATE Mode described below.

8. Enter the Calibrate mode by typing: "CAL <Enter>."

NOTE: In the Calibrate mode only, the "K" key toggles the transmitter PTT line on and off. The "SPACE BAR" toggles the PK-232's tone generator from "Mark" (the lower pitched tone) to "Space" (the higher pitched tone). The PK-232 has a transmit watchdog timer circuit that unkeys your transmitter automatically after sixty (60) seconds. As you perform the following adjustments, unkey periodically, then rekey the transmitter by typing "K."

9. Adjust the transceiver's Microphone Gain control to its minimum setting.

10. Press the "K" key on the keyboard to key the transmitter. Increase the transceiver's microphone gain control until you hear a continuous tone in the radio's monitor output.

11. If you are able to hear the tones in radio's speaker, tap the space bar several times until you hear the lower pitched of the two tones ("mark").

12. With the PK-232 keying the transmitter and transmitting the lower of the two tones, adjust the transmit audio level as follows:

    If you have already connected and calibrated an FM transceiver to the other PK-232 RADIO port, then complete the following:

    I. Rotate the microphone gain control counterclockwise (CCW) until it is in the totally OFF position.

    II. Turn the transmitter's microphone gain control adjustment clockwise (CW) until until the ALC meter shows a small deflection from the unmodulated reading. Check the radio's plate/collector current or output power indicators.

    III. Adjust the microphone gain control until the radio's indicators show approximately thirty percent (30%) of the manufacturer's rated full-power reading.

EXAMPLE: If the manufacturer's plate/collector current specification for CW operation is 200 mA, set the AFSK Output Level control and your microphone gain control so that the plate/collector current indicates approximately 75 mA.

If you have not connected and calibrated an FM transceiver to the PK-232 and do not plan on doing so, then complete the following:

I. Rotate the microphone gain control clockwise (CW) approximately in the one-quarter ON position.

II. Turn the PK-232's rear-panel AFSK Output Level adjustment screw clockwise (CW) until until the ALC meter shows a small deflection from the unmodulated reading. Check the radio's plate/collector current or output power indicators.

III. Adjust the AFSK Output Level control until the radio's

indicators show approximately thirty percent (30%) of the manufacturer's rated full-power reading.

EXAMPLE: If the manufacturer's plate/collector current specification for CW operation is 200 mA, set the AFSK Output Level control and your microphone gain control so that the plate/collector current indicates approximately 75 mA.

13. Type "K" to return to receive mode.

14. Type "Q" to "Quit" (exit) the calibration routine.

You have now set the PK-232's transmit audio output level and your SSB radio's microphone gain control to an approximately correct level for all operating modes.

NOTE: For Mode A (ARQ) AMTOR and packet radio operation, the radio's microphone gain control can be adjusted to produce the full-power output plate current recommended by the radio manufacturer. These modes are "bursty" modes; the transmitter is keyed on and off automatically by the PK-232.

The resulting duty cycle is much less than 100% and full-power operation is generally acceptable.

15. With your radio in receive mode, tune the receiver to a clear, unoccupied frequency.

16. Set the receiver's audio volume control (AF GAIN) to the position you would normally use for CW reception. This is the approximate receiver audio output level for best receive performance from your PK-232's modem.

17. Turn the PK-232's front-panel THRESHOLD control clockwise until the DCD LED is lit by the noise output from your receiver, then slowly counterclockwise until the DCD LED is no longer lit.

CHAPTER 4

PACKET RADIO

4.1 Overview

In the last several years Packet Radio has grown to become perhaps the most popular digital mode found on the amateur bands. Although Packet can be found on HF (primarily on the 20 meter band) it is most popular on the VHF and UHF FM bands. This chapter will start with general Packet Radio operation and then discuss VHF and UHF Packet. Packet radio on the HF bands requires some special considerations, so we will leave it until the end of this chapter.

4.1.1 Getting Started

You can learn quite a bit about Packet operation with the PK-232 before even connecting it to a transceiver. For your first packet practice, the PK-232 will be connected in a "loopback" circuit as done in the "Quick Check" performed in Chapter 2. In this configuration, the PK-232 will "talk to itself" which allows you to become familiar with packet operation before actually going on the air.

4.1.2 Making the Loopback Connection

Make sure the PK-232 is turned OFF and power is removed before performing one of the following.

I If you constructed a single Radio cable in Chapter 3, you should have one unused radio cable available for the following:

1. Get the unused Radio Cable from Chapter 3.
2. Strip about 1/4 inch of insulation from the Green and White wires at the "radio" end of the cable.
3. Join the Green and White wires by twisting them together gently.
4. Insert the 5-pin plastic plug end of the cable into the "RADIO-2" connector on the PK-232's rear panel. Be sure that the plug is inserted with the cable running downward.
5. Set the front-panel "RADIO-1/RADIO-2" switch to "RADIO-2."
6. Skip to section 4.2.

II If you constructed two Radio Cables in Chapter 3 and do not have an unused Radio Cable, then you must do the following:

1. Locate JP1, the Battery Jumper which can be removed through a hole in the bottom of the PK-232 located immediately behind the "RADIO-1/RADIO-2" switch.
2. Remove this Jumper by lifting it straight up off the two posts.
3. Place this Jumper on pins 1 & 2 of the RADIO-2 connector J6.

   NOTE: Pins 1 and 2 are the right most pins of J6 when looking at the connector from the rear of the PK-232.
4. Set the front-panel "RADIO-1/RADIO-2" switch to "RADIO-2."
5. Skip to section 4.2.

4.2 Packet Introduction

You've now connected your PK-232's transmit audio output to its receive audio input. Your PK-232 can now "talk to itself" in packet.

1. Set the rear panel AFSK level control at 50% (straight up and down) for the following Packet introduction.

NOTE: If you have adjusted the rear panel AFSK level control for a particular transceiver as discussed in chapter 3, then mark this setting with a pencil so it can be reset when finished.

2. Turn on your computer. Load and run your communications program.

   If you are using an Timewave or AEA PAKRATT Program, follow the program manual to enter the Packet mode and then skip to step 4.

   If you are using another Computer program or a Terminal, set the communication parameters as done in Chapters 2 and 3.

3. Press the PK-232's power switch to the ON position if you have not already done so.

   If you are using a Radio Cable to form the Loopback connection, you should notice the sign-on message seen in chapter 2. The Packet (PKT) LED on the PK-232 front panel should also be lit.

   If you used the Battery Jumper to form the Loopback connection, then you must type an asterisk character (*) before you will see the sign-on message.

4. After you have seen the sign-on message and/or entered the Packet mode, you must enter your own callsign (with the MYCALL Command) if you are to converse with any other Packet stations. If you try to connect to a station without entering your call sign, your PK-232 will send you the following message:

```
?need MYcall
```

   If you are a SWL and do not intend to transmit, you should enter "AAA" as a Callsign (MYCALL).

   If you are using an AEA PAKRATT program, follow the instructions in the Program Manual to enter your callsign. If you are using a terminal or terminal emulating program on your computer, you must use the MYCALL command to install your call sign in your PK-232. For example, if your Callsign is WX2BBB, enter the following:

```
cmd:MYCALL WX2BBB
MYcall   was PK232
MYcall   now WX2BBB
```

5. Turn the front-panel THRESHOLD control fully CounterClockWise (CCW) and notice that the DCD LED is dark. Then turn the THRESHOLD control fully ClockWise (CW) - the DCD LED should now light. Adjust the THRESHOLD until the DCD LED just goes out. This should occur between the 2-o'clock and 4-o'clock position.

6. If you are using an Timewave or AEA program follow the instructions to CONNECT in packet mode to your own callsign (the one you just entered in MYCALL).

   If you are using a Computer Terminal or a non-Timewave program, entering the following after the "cmd:" command mode prompt will cause the PK-232 to Connect to yourself:

   CONNECT (your callsign) <Enter>

   After pressing <Enter>, you should observe the SEND LED light. At the same time, the DCD LED should light and the TUNING bar graph spread. After a few moments, your monitor should display:

   *** CONNECTED to (your callsign)

   Notice that the front panel Connect STATUS LED (CON) has lighted indicating that the PK-232 is connected to a packet station. You may also notice that the Converse LED (CONV) is lit indicating that the PK-232 is ready to Converse with the packet station you just connected to (in this case it is yourself).

7. Type a few characters to yourself such as "Hello this is my first packet Connect. My name is (name)" then press the <Enter> key.

   Shortly after you press the <Enter> key, you should see the message you typed appear again on your screen. If you had connected to another Packet station, they would have seen the message you typed at nearly the same time.

   This is how a packet connection is established. Whether you are "Connecting" to another station, a Packet Bulletin Board System (PBBS) or a Networking Switch (more on this later) this initial procedure must be used to establish each and every Connection.

8. After you have typed a few lines (packets) to yourself, you will probably want to end the connection or DISCONNECT.

   If you are using an AEA program, follow the instructions to DISCONNECT from the packet station you are talking to.

   If you are using a Computer Terminal or a non-AEA terminal program, the following will cause the PK-232 to DISCONNECT:

   Enter <CONTROL-C> (hold down the Ctrl and then type the letter C). Your monitor should respond with the command prompt:

   cmd:

   Enter D <Enter>. (Do not type "ENTER", just press "D") Your monitor should respond with:

   cmd:*** DISCONNECTED: (your callsign)
   (your call)*>(your call) (UA)

   Note that the front panel Connect Status LED (CON) should go out.

9. You have just done the three things necessary in any Packet QSO.

- o You started the QSO (with yourself) by CONNECTing. (Step 6)
- o You sent some information (to yourself) and then received the information that you sent. (Step 7)
- o You then ended the QSO by DISCONNEcting. (Step 8.)

Repeat steps 6, 7 and 8 above until you feel comfortable with Connecting, exchanging information and Disconnecting. These operations will be performed each time you use Packet so they should be second nature to you before going on the air.

10. When you feel comfortable Connecting, sending information and Disconnecting, you are ready to start listening to VHF packet.

11. Turn OFF and remove power from the PK-232. Return the rear panel AFSK level potentiometer to the setting you marked in step 1 before continuing to the next section.

12. If you used a Radio Cable to form the audio "loopback" on the RADIO-2 connector, then remove this cable from the PK-232.

    If you used the Battery Jumper to form the audio "loopback", then remove this jumper from the RADIO-2 connector. Carefully replace this jumper over the posts of JP1 accessed from the bottom of the PK-232 immediately behind the RADIO-1/RADIO-2 switch.

4.3 VHF/UHF Packet Operation

We will first listen (and watch) some of the VHF or UHF Packet activity in your Local Area before going on the air. This will allow you to become a little better acquainted with packet in your area.

1. Construct a Radio Cable for the VHF or UHF transceiver you intend to use for Packet as described in Chapter 3 and then connect your transceiver to the RADIO-1 connector on the PK-232's rear panel. Set the RADIO-1/RADIO-2 switch in the OUT (RADIO-1) position.

2. If the cable you constructed in Chapter 3 does not have a connection for Receive Audio, then you must connect the receive audio from your transceiver to the RX-IN AUDIO 1 connector.

3. Load and run your communications program and enter the Packet Mode as done in the Packet Introduction section above.

4. Turn ON your VHF or UHF FM transceiver and tune to a known packet channel in your area. Most packet operation is on simplex, so the repeater offset on your transceiver should be disabled. If you know there is packet in your area, but do not know the frequency, you should try some of the following frequencies:

   2 meter (144 MHz) band:
   145.01 MHz, 145.03 MHz, 145.05 MHz, 145.07 MHz, 145.09 MHz
   144.99 MHz, 144.97 MHz, 144.95 MHz, 144.93 MHz, 144.91 MHz

1-1/4 meter (220 MHz) band:
223.40 MHz, 223.42 MHz, 223.44 MHz, 223.46 MHz, 223.48 MHz

70 cm (440 MHz) band:
440.975 MHz, 441.000 MHz, 441.050 MHz, 441.025 MHz, 441.075 MHz

You know you've found a packet channel when you hear the characteristic "Braaaaaap" sound of packet transmissions.

5. Once you've found an active packet channel, you must make sure you have enough receive audio (volume) from your transceiver to light the DCD LED on the PK-232 when a packet is being received. If the DCD LED does not light when packets are received, you must either increase the audio level from your transceiver, or rotate the PK-232's front panel THRESHOLD control CLOCKWISE. The DCD LED must light for the PK-232 to be able to receive packets.

   You must also make sure that the DCD LED goes out when no packet signals are present on the channel. If the DCD LED does not go out when the channel is clear, make sure the Squelch control on your transceiver is set high enough to silence the speaker. If your Squelch is functioning, then you must either rotate the PK-232's front panel THRESHOLD control Counter-Clockwise until the DCD LED goes out when no signals are present, or decrease the audio level. When the channel is quiet, the DCD LED must be OFF.

   If the DCD LED stays on when the packet channel is quiet, your PK-232 will never send packets to other stations.

4.3.1 What You Should See

If all is operating properly, you should see some packets on your screen. Some typical packets you might "Monitor" are shown below:

```
N7ALW*>WA7GCI [C]
WA7GCI*>N7ALW (UA)

K6RFK>N7ALW*>N7GMF:
Goodnight John, its been nice talking to you.

N7ALW*>WA7GCI:
Hi Bob, how are you this evening?

KD7NM*>MAIL:
Mail for: K6RFK N7ML

N7HWD-8*>ID:
NET/ROM 1.3 (SEA)

SEA*>N7ML:
SEA:N7HWD-8> Connected to #SEA:N7HWD-7

K6RFK>N7ALW*>N7GMF [D]
N7GMF>N7ALW*>K6RFK (UA)
```

NOTE: You will probably see data (Packets) on the tuning bar-graph which do not print on the screen. This is normal and is a function of the MONITOR and the MPROTO commands.

4.3.2 What It Means

There are different types of packets that will mean different things to your PK-232. Your PK-232 keeps track of and knows what to do with all these packets and so the user does not have to worry about them most of the time. Since the PK-232 has the capability of "Monitoring" all the packet activity on a channel we'll briefly discuss the types of packets you will most often see. Skip to the next section if you do not plan on doing much channel monitoring.

Let's look at the first packet in the examples above and get acquainted with what it all means.

```
N7ALW*>WA7GCI [C]
```

Every single packet you send will have your callsign (the one you just entered in MYCALL) as the first callsign of the packet. The callsign after the ">" is the next station the packet will go to. So the packet listed above originates from N7ALW and is being sent to WA7GCI.

All packets will have at least these two callsign fields.

The "[C]" immediately following the two callsigns identifies this packet as a CONNECT Request. So we see that N7ALW is requesting a packet CONNECTION with WA7GCI.

The second packet in the above examples is a response to the first.

```
WA7GCI*>N7ALW (UA)
```

In this case we see that WA7GCI is sending to N7ALW by the order of the callsigns. This packet acknowledges the Connect request as shown by the "(UA)" which stands for Un-numbered Acknowledge.

One benefit of packet radio is that packets can be relayed or "digipeated" by any station on the same frequency. In fact, packets can be relayed by up to eight other stations to get them to a distant station you cannot reach directly. In practice, digipeating through a

large number of stations does not work very well, but still you will often see packets that are digipeating through one or two stations to get to their destination. The packet shown below is an example of a digipeated packet.

```
K6RFK>N7ALW*>N7GMF:
Goodnight John, its been nice talking to you.
```

This packet originated from K6RFK and is being sent to N7GMF but is "Digipeated" through the station N7ALW. We also see that this packet contains data by the text "Goodnight John...". Another thing that should be noticed in this packet is the asterisk (*) in the first line. The asterisk tells which station was actually heard sending the packet. In this case, we can see that we actually heard radio station N7ALW. Without the asterisk, we could not tell whether the transmission came from radio station K6RFK or N7ALW. More will be discussed about digipeating later, but the above example is typical.

The following packet is a data packet from N7ALW to WA7GCI.

```
N7ALW*>WA7GCI:
Hi Bob, how are you this evening?
```

Remember that in the first example we saw the two stations Connect. Now that they are connected, they may exchange data packets.

The following packet is a Beacon packet from KD7NM. Since we see the packet is addressed to "MAIL" we know KD7NM is probably a Packet Bulletin Board System (PBBS).

```
KD7NM*>MAIL:
Mail for: K6RFK N7ML
```

The data section of this packet says "Mail for: K6RFK N7ML". This Beacon lets people know that K6RFK and N7ML have mail waiting on the KD7NM PBBS without having to connect.

The following Beacon packet is intended as identification for a NET/ROM level-3 packet networking switch.

```
N7HWD-8*>ID:
NET/ROM 1.3 (SEA)
```

In this case, the Packet Switch is using the callsign N7HWD-8, but also uses the alias SEA as a callsign. There are many types of Packet Switches now in use, but NET/ROM is one of the most popular. We will briefly discuss using a NET/ROM switch later in this chapter since most switches operate in much the same way.

The packet below was sent by the network switch SEA to N7ML.

```
SEA*>N7ML:
SEA:N7HWD-8> Connected to #SEA:N7HWD-7
```

The packet above from SEA contains the data "SEA:N7HWD-8> Connected to #SEA:N7HWD-7". This message tells N7ML that he is now connected to another port on the SEA Node named #SEA. Again, we will talk more about how and why N7ML might want to do this later in the chapter.

The following packet is again from K6RFK to N7GMF and is being digipeated through N7ALW. This packet indicates that K6RFK is finished talking to N7GMF and wants to Disconnect. Again we see that we are not hearing K6RFK, rather we are hearing N7ALW as indicated by the asterisk (*) after his call.

```
K6RFK>N7ALW*>N7GMF [D]
```

The following packet is an acknowledgment (or simply called an ACK) that lets K6RFK know that N7GMF has acknowledged the Disconnect request sent above. K6RFK and N7GMF are no longer Connected.

```
N7GMF>N7ALW*>K6RFK (UA)
```

4.3.3 What Happens When You Connect

If you are working with a friend who is familiar with packet, you may want to skip to section 4.4. If you are on your own, the following three sections will help you learn what to expect on VHF/UHF packet.

There are three different kinds of packet stations you are likely to encounter in your first Connects; Standard TNCs, Mailbox Systems and Network Switches. The following sections discuss each station type.

4.3.3.1 Standard TNCs

When you first turn on your PK-232, it becomes a standard AX.25 packet TNC (Terminal Node Controller). All TNCs and Multimode controllers have this capability. When you Connect to a TNC, in most cases you will be connecting directly to someone's computer screen. If you see an automatic Connect Message (CMSG) similar to the one below, you know you have reached a TNC.

```
Welcome to my packet station, if I don't respond, please
leave a message and Disconnect.
```

If you get a message like this when you connect to another station, usually you would type something like "Are you there?". If you do not see a response from the other station in a minute or so, simply leave a message - just like a telephone answering machine.

The TNC at the other station should then hold your message until the operator returns to the computer or terminal. Later we will discuss how your PK-232 can do the same for messages it receives from others.

4.3.3.2 Mailbox Message Systems

Although Standard TNCs allow incoming messages to be saved, there is no way for the owner to leave a message for someone who will connect at a future time. The ability to both send and receive messages without the owner being present is accomplished by a Mailbox.

There are many different Packet Mailbox systems in use. Some systems are large and require the use of a dedicated computer. Other systems are small like the personal MailDrop built into your PK-232 MBX.

Large systems are often called Packet Bulletin Board Systems (PBBS) since they serve as electronic message centers for a local area. PBBS's are a source of information as well as a gateway for messages that can be sent to and received from other parts of the country or world. You will probably want to locate the PBBS nearest you and connect to it from time to time.

Most Mailbox systems are easy to use and whether they are small or large, operate in much the same way. Another nice feature of Mailboxes and other automatic systems is that they usually have Help available by sending an "H" or "?". If you connect to a Mailbox such as a PK-232 MailDrop you will see something like the following:

```
*** CONNECTED to KD7NM
[AEA PK-232M]  18480 free  (A,B,H,J,K,L,R,S,V,?) >
```

If you get something like this when you connect to another station, try typing an "H" or a "?" to get a help list as shown below:

```
A(bort)   Stop Read or List
B(ye)     Log off
H(elp)    Display this message
J(log)    Display stations heard
K(ill)    K #: Kill message number #
          KM : Kill messages you have read
L(ist)    L  : List message titles
          LM : List messages to you
R(ead)    R #: Read message number #
          RM : Read all your unread messages
S(end)    S  : Send a message to SYSOP
          S n: Send a message to station n
V(ersion) Display TNC firmware version
?         Same as H(elp)
[AEA PK-232M]  18480 free  (A,B,H,J,K,L,R,S,V,?) >
```

There are quite a few options available on the MailDrop, but the most commonly used commands are L(ist), R(ead), S(end) and K(ill) message.

For example, you may first want to LIST all the messages that are available on a mailbox that you connect to. This is done by simply sending "L" or "LIST" command to the system you have just connected.

If you are interested in any of the message subjects that appear, you may then READ the messages that interest you. To read a message, simply send the command "R (message number)", where (message number) is the number of the message you are interested in.

After you are finished reading messages, you may want to SEND a message to the SYSOP (short for System Operator) or to another user. To send a message simply enter "S (callsign)" where (callsign) is the call of the station you are sending the message to.

When you are finished listing, reading and sending messages, you will want to send the Bye command to log-off (disconnect) from the Mailbox.

Feel free to experiment with Mailboxes and other packet systems. Remember that most automatic systems will send you help on commands if you send an "H" or "?". For more information on setting up and using your own PK-232 Maildrop, see Chapter 5 on MailDrop Operation.

4.3.3.3 Packet Switches and "Nodes"

When Amateur Packet radio was first beginning there were not many stations on the air. Amateurs at that time "digipeated" through many stations (up to 8) to connect to others over long distances. As more users became active on packet, digipeating quickly proved to be an inefficient way of relaying packets through even a very few stations.

To solve this problem, Amateurs began working on more efficient "higher level" ways of routing packets over long distances. NET/ROM (tm), ROSE, TCP/IP and TEXNET are some of the higher level protocols that emerged and are currently in use around the world.

NET/ROM, developed by Software 2000, quickly became a standard that others imitated. Many networking "Nodes" today use a similar if not identical set of commands. We will discuss the "Typical" NET/ROM commands you will likely encounter when connecting to a packet switch.

When you connect to a NET/ROM Node you will not initially get any prompt. Since NET/ROM commands are few and easily memorized, they did not see a need to clutter the channel with prompts. Like other automatic systems however, if you send an "H" or a "?" for Help you can expect to get a response similar to the following:

```
SEA:N7HWD-8> Invalid Command (CONNECT INFO NODES ROUTES USERS)
```

In our example, the line above is from the Seattle node, simply known as SEA. The callsign for the node is N7HWD-8. "Invalid Command" means that the node did not understand the command you sent, so it returned the above "help" line to remind the user of the commands it knows. These are CONNECT, INFO, NODES, ROUTES and USERS.

Most often you will use the nodes CONNECT command to connect to other stations. Once you have connected to the node, simply send the command "CONNECT (callsign)" or simply "C (callsign) where (callsign) is the call of the packet station you want to connect to that is in range of the node.

Not everyone you want to talk to is in range of your local Node. Fortunately, NET/ROM will learn about other nodes it can reach and allow you to connect to these nodes as well. To find out what other nodes your local station can reach, simply type the command "NODES" after you connect. This will display something like the following:

```
SEA:N7HWD-8> Nodes:
BALDY:WB6VAC-8     BOI:W7SC           BOISE:N7FYZ-8    COE:KK7X-4
ELN:N7HHU-8        EVT:KA7VEE-8       LSO:K7ZVV-8      MCW:WB7DOW-12
MSO:W7DVK-5        OLY:K7APT-8        PDT:N7ERT-5      PDX7:KA7AGH-8
PTN:K7TPN-8        RLIMB:W0RLI-2      SALEM:AF7S-1     SEAW:N8GNJ-8
SPOKN:WB7NNF-8     SVBBS:KA7RNX       TAC:W7DK-8       YKM:K3GPJ-8
```

When you connect to a node (either directly or through another node) you may want to know who else is using that particular node. Type the command "USERS" to find out who is using the system. You will see your own call in the list as well as anyone else who is using the node. An example is shown below:

```
SEA:N7HWD-8> NET/ROM Version 1.3 (662)
Uplink(W7MCU)                        <-->  Downlink(W7MCU-15 WA7ZUE)
Circuit(SEAW:N8GNJ-8 KA7RZK)
Uplink("your callsign")
```

The IDENT command simply sends you an identification packet from the node that may give its location and owner as shown below:

```
SEA:N7HWD-8> NORTHWEST AMATEUR PACKET RADIO ASSOCIATION
145.01 MHZ, USER LAN, GRASS MTN.
Local BBS is N7HFZ
```

The ROUTES command provides routing information about other nodes that can be reached.

A complete discussion of NET/ROM is beyond the scope of this manual, but we hope the above information will help get you started. Certainly the CONNECT, NODES and USERS commands will allow you to navigate through the network, and find new people to talk to.

4.3.4 Who Can I Talk To?

Now that you understand a little about the different packets and packet stations, you are ready to make your first real connection.

If you do not have a friend on Packet in your local area, then you will want to choose a station you can reach. Fortunately the PK-232 has a command called MHEARD that displays the list of the 18 most recently heard stations. Check this list in one of the following ways:

I If you are using an AEA PAKRATT program, follow the instructions in the PAKRATT manual for checking the Packet MHEARD list.

II If you are using a Terminal or Terminal Program on your computer, then first type a <CTRL-C> to make sure you are in the PK-232 Command (cmd:) mode. Then type the command MHEARD as shown. You should then see a display similar to the one below.

```
cmd:MHeard
........  N7GMF
........  K6RFK
........  SEA*
........  N7HWD-8*
........  KD7NM*
........  N7ALW*
........  WA7GCI*
cmd:
```

The callsigns in the list are the stations heard by your PK-232 with the most recently heard station at the top of the list. As in the Monitored packets, the asterisks (*) indicate that the station was heard directly by the PK-232. The callsigns without an asterisk were relayed by another station and so cannot be connected to directly.

4.3.5 Your First Real Connect

Choose one of the stations with an asterisk displayed in YOUR MHEARD list, or a friend that you know is "on the air" near to you.

If you are using an Timewave or AEA PAKRATT program, follow the instructions to CONNECT in packet mode to the callsign you chose above.

If you are using a Computer Terminal or a non-Timewave program, entering the following after the "cmd:" command mode prompt will cause the PK-232 to Connect to the call of the station (Callsign) chosen above:

```
CONNECT (Callsign) <Enter>
```

After pressing <Enter>, you should observe the SEND LED light. Your monitor should soon display:

*** CONNECTED to (Callsign)

If you see this, you have just Connected to your first packet station.

Identify what type of station you have connected to, and respond appropriately. After you have connected to a few stations, you should skip to section 4.4 to learn more about the PK-232 packet features.

4.3.6 I'm Having Trouble Connecting

If the station you are trying to connect to is connected to someone else, you may see the following message:

*** BUSY from (Callsign) DISCONNECTED

If you see this, simply wait a few minutes and try again or try connecting to a different station from your MHEARD list.

If the distant station cannot hear you, you may see the following:

*** Retry count exceeded
*** DISCONNECTED:

A number of different things can cause this to occur. It may simply be that the station you are trying to connect to is out of your transmitter's range. It is possible however that something more serious is wrong, so you should check the following before proceeding:

- The Loopback Test in section 4.2 functions properly.
- Your PK-232's AFSK Output Level control, your microphone gain, and deviation are set properly as discussed in Section 3.5.1.
- All cables and connectors are properly installed.
- The RADIO-1/RADIO-2 switch is set for your cable-to-radio setup.
- Your radio's volume and squelch are set for local conditions.
- You are following the correct procedure for Connecting. Remember that this procedure is slightly different for AEA PAKRATT programs than it is for terminals or terminal-programs.
- The "HBAUD" parameter is set to "1200" for VHF/UHF Operation.
- The "VHF" command is "ON" for VHF/UHF operation.
- RESET the PK-232 with the RESET command.

If none of the above correct the problem, ask one of your area's experienced packet operators to listen to your transmissions. Both you and your partner should set MONITOR and MCON to 6, and then send some packets. Each station should display packets sent by the other.

- If only one station is "hearing" packets, check the modulator and transmitter of that station and the demodulator and receiver of the other station.
- Experiment with the TXDELAY parameter for the sending TNC. Try setting TXDELAY 64 for a long delay. If this solves the problem, decrease TXDELAY to the smallest value that works all the time.

If none of the above allow you to connect to other stations, then you should contact Timewave Technical Support before proceeding.

4.4 More Packet Features

Now that you have worked a few packet stations, it is time to learn a little more about the other packet capabilities of the PK-232. Rather than explain all the features in detail, we will leave the specifics to the command descriptions in the Command Summary Appendix.

4.4.1 LED Status and Mode Indicators

Your PK-232's front-panel LEDs show you the operating mode and status at any moment. Each LED is marked with an abbreviated name, but some LEDs have two functions. All markings referring to packet are below the LEDs. The following front-panel LEDs are used in packet operation.

MULT	Multiple	Lit when multiple connections exist Blinks when receive buffer is full
SEND	Send	Lit when PTT line is active
CONV	Converse	Lit when in the Converse Mode
STA	Status	Lit when you have sent a packet that has not yet been acknowledged Blinks when you have MailDrop messages
CON	Connected	Lit when a packet Connection exists
CMD	Command	Lit when in the Command Mode
TRANS	Transparent	Lit when in the Transparent Mode
PKT	Packet	Lit when in the Packet Radio Mode
DCD	Data Carrier Detect	Lit when data signals are received

4.4.2 Automatic Greetings

You can tell your PK-232 to send an automatic greeting to any station that connects to you. This can be used to tell others that you are out of the shack - or for any other message you would like to send.

To enable the CTEXT message, set your Connect Text message using the CTEXT command. Then set CMSG ON to enable the Connect Message feature. Think of the CTEXT message as the message your telephone answering machine might give to a caller.

4.4.3 Beacon Operation

Your PK-232 can send an automatic "beacon" message at a specified time interval. A beacon can send special announcements, or let others know you are on the air. To enable beacon operation do the following:

- Set your beacon message with the BTEXT command.
- Set the beacon interval using the BEACON EVERY or AFTER command.
- A beacon frame is sent to the path given in the UNPROTO command.

In the early days of packet, the beacon was useful to show your presence on the packet channel. With the growth of packet, many users feel that beacons have outlived their usefulness and interfere with traffic. Use your beacon with consideration for others.

As a reminder, if you set the BEACON timing at a value considered too small for busy channels (less than "90"), you'll see:

```
WARNING: BEACON too often
```

4.4.4 Digipeater Details

You may wish to connect to a packet station that is beyond your direct radio range. If a third packet station is on the air and both you and the station you want to talk to are in range of that third station, the third station can relay or "digipeat" your packets. You simply set the "digipeater" routing when you connect. Here's a sketch that shows how digipeating can solve problems:

```
                              WX2BBB
                              /    \
                WX1AAA _______/      \_________ WX3CCC
```

You are station WX1AAA - you want to have a packet QSO with WX3CCC. But there's a mountain between you and WX3CCC; you're out of simplex range of each other. However, you know that there's a packet station located on the ridge - WX2BBB - which is in range of you and WX3CCC.

Instruct your PK-232 to set up a connection to WX3CCC using WX2BBB as an intermediate digipeater. When you initiate the Connect, type: "CONNECT WX3CCC VIA WX2BBB."

WX2BBB has turned off his station, but you can still contact WX3CCC by going around the mountain through WX4DDD and WX5EEE as shown:

```
                            xxxx
                           /      \
           WX1AAA _________/        \__________ WX3CCC
              .                                  .
               .                               .
             WX4DDD .  .  .  .  .  .  .  .  WX5EEE
```

This time, type the connect command like this:

CONNECT WX3CCC VIA WX4DDD,WX5EEE

Type the digipeaters' call signs in the exact order of the intended path from your station to the station with which you wish to connect.

You can specify a routing list of up to eight intermediate stations. In practice this does not work very well, and Networking Switches such as NET/ROM have replaced digipeating for the most part. Still, it is sometimes necessary to digipeat through one or two stations.

4.4.4.1 Are You a Digipeater?

Your packet station can be a digipeater for other stations. You don't have to "do" anything - your PK-232 will digipeat other stations - unless you tell it not to! with the DFROM command.

If your transmitter is keyed when you're not using it, or during lulls in your own conversations, you're being used as a digipeater by some other stations. This won't bother your chat with your partner.

If you wish to monitor the other stations that are using you as a digipeater then set MDIGI ON.

4.4.5 Monitoring Other Stations

Use the MONITOR parameter to determine what kinds of packets you will see when you are NOT connected to any another station.

"MONITOR" takes a numerical value between "0" (zero) and "6." Each higher number adds more detail to your monitoring. As the value of the MONITOR setting is increased, additional functions are included in the monitoring sequences. The meanings of the MONITOR numbers are:

0 Monitoring is disabled.

1 Only unnumbered, "unconnected" frames are displayed. This setting will display Beacons, but not display connected stations.

2 Numbered (I) frames are also displayed. Use this setting to monitor connected conversations in progress on the channel.

3 Connect request ("C") frames and disconnect ("D") request packets in addition to the above are displayed.

4 This is your PK-232's default value. Unnumbered acknowledgment (UA) of connect and disconnect frames are also displayed with either the characters "UA" or "DM" and a header.

5 Receiver Ready (RR), Receiver Not Ready (RN), Reject (RJ), and Frame Reject (FR) supervisory frames are also displayed.

6 Poll/Final bit and sequence numbers for monitored frames are shown.

Understanding all types of packet frames is not important to operate packet. Packet operators should however understand that there are many types of control frames that do not contain printable data.

Your PK-232 can display these frames, but most users only want to see frames with information. For this reason, the default of the MONITOR command (4) does not display all the packets that the PK-232 hears.

NOTE: If you will be leaving your PK-232 on to accept connects from others while your computer is off, set MONITOR to 0 (zero) and type a <CTRL-S> to hold the data.

4.4.5.1 Monitoring the Packet Networking Switches

There are other types of frames used by networking switches that the PK-232 does not normally display. These frames can be seen with the MPROTO command. Turning the command MPROTO ON allows ALL AX.25 frames to be displayed. Some packets you might see with MPROTO ON will contain information that may interfere with the display on your terminal or computer causing it to look "funny". For this reason the MPROTO command default is OFF.

If you are hearing packets that sound strong but are not displayed on your screen, setting MONITOR to 6 and MPROTO ON should show them. If you are curious about the packets that do not print, you may find the command WHYNOT useful. When WHYNOT is turned ON, the PK-232 will give a reason why each packet was not displayed. If you are interested in exactly how the packets are represented, turn on the TRACE command. See the Command Summary for more information about WHYNOT and TRACE.

4.4.5.2 Monitoring Other Stations While Connected

When you are NOT connected to another station, the MONITOR command discussed above determines what packets are displayed. When you ARE connected, the MCON command determines what packets are shown.

The default of MCON is 0 which tells the PK-232 NOT to monitor any packets while you are connected. Most users like this so they are not disturbed with monitored channel data when they are communicating with another station. If it is desired to monitor channel activity while you are connected, then remember to set MCON to an appropriate Monitor number from the list above or the command summary.

4.4.5.3 Selective Monitoring

After you have monitored channel activity for a while, you may decide there are only a few stations you wish to display. The PK-232 will let you do this with the Monitor-TO (MTO) and Monitor-FROM (MFROM) commands. With the MBELL command, you can even be alerted when a certain station transmits on the frequency. These commands work in conjunction with MONITOR and MCON commands.

4.4.5.4 The MFILTER Command

Some terminals and computer programs are sensitive to certain characters that may appear in monitored packets. You will know this is happening if occasionally the cursor on your screen moves to strange places causing the copy to be garbled.

The PK-232 default for MFILTER is $80 which prevents most control characters from interfering with your display. If you find a terminal or printer is bothered by certain characters, see the Command Summary for more information on the MFILTER command.

4.4.5.5 Monitor Without Callsign Headers

Sometimes you may wish to monitor certain stations without wanting to look at the packet callsign headers. This can be useful when monitoring message traffic from a large Packet Bulletin Board System (PBBS). The MBX command allows you to choose the callsign of a station, or a pair of stations you wish to monitor without seeing the packet headers. See the Command Summary for details.

4.4.5.6 MSTAMP - The Monitor Time-Stamp Command

Monitored packets can be time-stamped if the real-time clock has been set with the DAYTIME command. To timestamp monitored packets, turn the MSTAMP command ON. Turning the DAYSTAMP command ON adds the date to the timestamp provided by the MSTAMP command.

4.4.6 Packet Connects

When you turn your PK-232 on and enter your callsign, anyone can Connect to you. If you are at your terminal or computer when this occurs you will see a message like the one shown below:

*** CONNECTED to N7GMF

When a packet connection occurs, the PK-232 automatically switches to the Converse mode so what you type on the keyboard will be sent to the connected station. The NEWMODE and NOMODE commands control when and how the PK-232 changes to and from Command mode in response to packet connects and disconnects. You will probably never need to change these settings.

4.4.6.1 Time-Stamping Connects

Sometimes it is useful to know what time someone connected to you - perhaps for logging purposes. To time-stamp your packet connects and disconnects turn the command CONSTAMP ON. As discussed in the Monitoring section above, turning the command DAYSTAMP ON will add the date to this time-stamp as well. The DAYTIME command must be set first for this to operate.

4.4.6.2 Connect Alarm

If you are in the ham shack but busy doing other things, you may want to be alerted when someone connects to you. Turning the command CBELL ON will ring the bell on your terminal when another station connects or disconnects from you.

4.4.7 Packet Formatting and Editing

Some of your PK-232's command parameters affect how your packets are formatted - how your typing appears to the rest of the world. Other commands let you correct typing errors before your packet is sent, cancel lines or cancel packets if necessary.

4.4.7.1 Carriage Returns and Linefeeds in Packets

Most people use packet radio for sending and receiving messages or conversing with other Amateurs. The character used to send a packet is defined with the command SENDPAC which defaults to a Carriage Return ($0D). The SENDPAC character may be changed, but most will find the Carriage Return or Enter key to be a natural choice.

Similarly, your PK-232 will include a Carriage Return in the packet you send to the other station since this makes for a more natural conversation. The ACRPACK command (default ON) controls this feature, and most people will never want to change this.

The PK-232 also has the capability of adding a linefeed character ($0A) automatically to packets that you send to others. AEA PAKRATT programs and most other terminal programs do this automatically. If you encounter a station that says your packets are overprinting, you may want to turn the ALFPACK or the ILFPACK command ON temporarily.

4.4.7.2 Canceling Lines and Packets

Most of the time, the Backspace key (or the Delete key on some machines) is all that is needed to edit a line before it is sent. Occasionally it may be helpful to cancel the line, or the entire

packet you are entering with one key stroke. The CANLINE character (default <CTRL-X>) will cancel the entire line you are typing. The CANPAC character (default <CTRL-Y>) will delete the entire packet you are entering. These commands can be helpful, but use them with care.

4.4.7.3 Redisplay

If you have erased and retyped lots of characters, you may want to see "fresh" input, especially if BKONDEL is OFF. This will also allow you to display any packets you might have received while you were typing. Your PK-232 will show the line you're entering when you type the REDISPLAY character (default <CTRL-R>).

4.4.7.4 The PASS Character

If you are terminal or terminal program, the following may be useful. Sometimes you may want to include a special input character such as a Carriage Return (the SENDPAC character) in a packet. For example, to send several lines in the same packet, you must include <CR> at the end of each line. You can include any character in a packet (including all special characters) by prefixing that character with the PASS character <CTRL-V>:

```
I wasn't at the meeting.<CTRL-V><CR>
What happened?
```

Without the PASS character, this message would go out as two packets. By prefixing the first <CR> with <CTRL-V>, you send it all at once, while maintaining the <CR> as part of the text. The PASS character can be useful in formatting text Messages such as CTEXT as well.

4.4.8 Packet Transmit Timing

Your PK-232 has a number of built-in timers used to control the packet protocol and transmit timing. The default values have been set at the factory to provide reasonable performance, but the values may not be optimum for your local area. Most protocol parameters should be adjusted only after carefully reading about them later in the chapter.

You SHOULD adjust TXDELAY for your transmitter as indicated below.

4.4.8.1 TXDELAY and AUDELAY

Radios vary in the time it takes to switch from receive to transmit. If your PK-232 starts sending data before your transmitter is up to power, the packet will not be received properly at the distant end.

TXDELAY controls the delay between your transmitter's key-up and the moment when your PK-232 starts sending data. The default value of 30 corresponds to a time of 300 mSec and works with most VHF/UHF FM transceivers. With modern transceivers TXDELAY can often be reduced which will improve packet performance in your area. You should perform the following procedure to optimize TXDELAY for your station.

- Find another station who can reliably digipeat your signals.

    - Set your UNPROTO path to TEST via the callsign of the station who can digipeat your signals.

    - Set the MONITOR command to at least 1.

    - Go to CONVERSE mode and send a few packets by pressing the <Enter> key. Note that you should see them on your own screen when they are digipeated by the other station.

    - Start reducing TXDELAY by units of 5 each time making sure the other station is still digipeating ALL your UNPROTO packets. Eventually you will find a value where the other station can no longer copy your packets to digipeat them.

    - When this happens, increase TXDELAY in units of one or two until the other station again digipeats ALL of your packets. This will be the optimum setting of TXDELAY.

After TXDELAY is adjusted as indicated above you may want to adjust the audio delay (AUDELAY) as indicated in the Command Summary.

The next sections of this chapter will discuss some of the more advanced packet features including Multiple Connects, Packet Timing and Protocol, and HF Packet Operation.

4.4.8.2 AXDELAY and AXHANG

Although it is not common, packet can be used through voice repeaters.

When sending packets through an audio repeater you may require a longer key-up delay than is normally needed for direct communications.

The AXDELAY command adds more key-up delay in your PK-232 so that the repeater can lock-up. The AXHANG command sets the time your PK-232 assumes is needed for the repeater to drop.

4.5 Packet Protocol Basics

Here we will talk a little about the AX.25 packet protocol. You do not need to understand this to use packet, but it is helpful in understanding the packet protocol parameters.

There are two modes of packet transmissions Connected mode and Unconnected mode. Most of the time when you use packet, you will be conversing with another packet station in Connected mode. Still the Unconnected or Unprotocol mode comes in handy for beacon transmissions and roundtable conversations.

All packets are constructed basically the same. Packets contain source and destination callsigns (and any digipeaters if they are used), as well as information identifying the type of packet. This packet identification can be seen with the MONITOR command discussed earlier. All packets contain an error check code called the CRC. This ensures that when a packet is received, it will not contain a single error. The command PASSALL can disable the CRC error check, but this should only be done for experimental purposes only.

4.5.1 Unconnected Packets

In order to allow amateurs to send message beacons and to call CQ, the AX.25 protocol has the ability to send packets that are intended for more than one specific packet station to see. Since all packets must have a destination "callsign", the PK-232 sends Unprotocol packets TO the callsign of CQ. This can be changed with the UNPROTO command, but most people like this since it makes an easy way to call CQ.

4.5.2 Connected Packets

When you Connect to another station, the AX.25 packet protocol ensures that the station to whom you are connected receives all the packets that you send. Similarly, the protocol ensures you will receive all the packets that the other station sends to you. The following describes briefly how the protocol does this.

4.5.3 FRACK and RETRY

When the PK-232 is connected and sends a packet to another station, it expects an acknowledgment (ACK) packet from the other station to confirm that the packet was received. The AX.25 packet protocol will automatically retransmit (retry) packets when an acknowledgment is not received from the distant end of the link within a specified time.

The FRACK command (FRame ACKnowledge time) sets the time lapse allowed before the originating station retransmits (retries) the packet.

The RETRY command sets the maximum number of retransmissions before the sending station terminates the connection (DISCONNECTS).
The TRIES counter keeps track of the retries that have occurred on the current packet.

4.5.4 PACLEN and MAXFRAME

Packets will be sent either when the <Enter> key is pressed or when the maximum packet size is exceeded. The maximum packet size is set by the PACLEN command which defaults to 128 characters. When large amounts of data need to be sent, this value can be increased to 256. When conditions are poor or the channel is crowded as on HF packet, this value should be reduced to 64 or less.

The packet protocol allows more than one frame to be sent in a single transmission. The default is set to 4 by the MAXFRAME command. When conditions are good up to 7 frames can be sent to speed data transfer.

When conditions are poor or the channel is crowded, MAXFRAME should be reduced to only 1 frame.

4.5.5 Reducing Errors through Collision Avoidance

If every packet station could hear every other station, there would be very few "collisions" due to stations transmitting at the same time. Since packet operates over the radio, there are usually many stations operating on the same frequency that cannot hear each other. The digipeaters and network nodes allow these stations to communicate with each other, but this increases the chances of collisions.

The first attempt to avoid collisions was through the use of the DWAIT and RESPTIME timers. DWAIT forced the TNC to delay the transmission of any packet except for digipeated frames by the time selected. This fixed timer helped, but packet was still plagued by collisions. The RESPTIME was added to help with large file transfers. Still, more needed to be done to reduce collisions.

Another attempt to reduce collisions was the introduction of AX.25 version 2 protocol. On VHF packet, most everyone uses version 2 which is controlled by the AX25L2V2 command (default ON). On VHF this helps, but some users on HF packet are turning this command OFF.

An exponentially distributed random wait method was proposed by Phil Karn (KA9Q) called P-persistent CSMA. When the command PPERSIST is ON (default) the PK-232 uses the number set in PPERSIST and the time value set by the SLOTTIME command to more randomly distribute the transmit wait time. This is more efficient than using the DWAIT time.

As a further attempt to improve packet performance, Eric Gustafson (N7CL) proposed giving priority to acknowledgment packets (ACKs). This protocol is controlled by the ACKPRIOR command which currently defaults OFF. Check with the experienced packet users in your area and find out if they are using priority acknowledge or have changed any other parameters.

4.5.6 CHECK and RELINK

If someone connects to you and then turns his TNC off, you would probably not want to stay connected to the station forever. The CHECK timer determines the amount of time the PK-232 will wait before testing the link if no data has been sent or received.

The RELINK command sets what happens after the CHECK timer has expired. If RELINK is OFF, the PK-232 will change to the Disconnected state. If ON, the PK-232 will attempt to reconnect to the distant station.

4.6 Multiple Connection Operation

Since packet radio allows many stations to share the same channel, many QSOs can be going on at the same time. Because packet radio has this channel sharing capability, there is no reason you cannot converse with more than one station at the same time. Being connected to multiple stations at once is a powerful feature of your PK-232.

4.6.1 Multiple Connection Description

The PK-232 offers ten logical channels, each of which can support one conversation. In effect, multiple connect operation is much like a ten-line telephone with automatic "hold". When you are connected to multiple stations you will automatically receive everything sent TO you. You must select the proper channel (in effect push the proper line button on the telephone) to send data to a particular station.

If you are using an AEA PAKRATT program, this is described in the program manual. If you are using a terminal, the rest of this section will describe how to set up the PK-232 for multiple connections.

4.6.2 The Channel Switching Character

The logical channels are selected with the CHSWITCH character. You must choose a CHSWITCH character that you do not normally type such as the vertical bar "|" (ASCII $7C), or the tilde "~" (ASCII $7E). Once this has been selected and entered into the PK-232, you may initiate multiple connections with others on your radio channel.

You can now initiate connects on any of the logical channels numbered zero through nine (0-9). To change logical channels, press the CHSWITCH character you just defined, and then a number from 0-9. Remember that the test that you type will only be sent out to the station connected to the logical channel your PK-232 is currently on.

4.6.3 Will You Accept Multiple Connects

Setting the CHSWITCH character only allows you to make outgoing multiple connects. To set your PK-232 to allow incoming multiple connections, you must set the USERS parameter to more than one (1). The number you enter in the USERS command tells the PK-232 how many other users you will allow to connect to you at on time.

4.6.4 Display Multiple Connected Callsigns

Multiple Connection operation can be confusing - especially remembering who is connected on what channel. To help this, you may want to turn ON the CHCALL command to display the callsign of the station who is connected to you on a given channel number.

4.6.5 Doubling Received CHSWITCH Characters

If you want to be able to tell the difference between the CHSWITCH characters you type, and characters from other stations that happen to be the same as your CHSWITCH character, then set CHDOUBLE ON.

4.6.6 Checking Your Connect Status with the CSTATUS Command

To check what channels your PK-232 is currently set to, as well as who is connected to you, you may find the CSTATUS command helpful. CSTATUS is an immediate command that shows you the status of all 10 packet channels as well as the channel you are currently on.

4.6.7 The MULT LED

You will know you are connected to more than one packet station when the MULT LED on the front panel of the PK-232 lights.

NOTE: The MULT LED will blink if the PK-232's receive buffer is filled. This can happen if your computer is not connected to the PK-232, or if for some reason, your communications program no longer can accept any further inbound data.

4.7 HF Packet Operation

HF Packet is much trickier than operating on VHF. In this section we will assume you have as completed section 4.2 of this chapter and at least read section 4.3 and the MONITORING sections of 4.4. If at all possible, get some experience with VHF packet before trying packet on HF. Although this is not absolutely required, the experience will help you make HF packet contacts.

4.7.1 Where to Operate HF Packet

Before you can operate HF Packet, you find the activity. Most HF packet operation is on the 20-meter amateur band starting at 14.103 MHz and every 2 KHz above that up to 14.111 MHz. Note that 14.103 MHz is the calling frequency and a good place to start. The higher frequencies such as 14.109 and 14.111 are used mostly by HF PBBS systems and are not good places to look for a QSO.

4.7.2 PK-232 HF Packet Settings

Make sure your PK-232 is turned ON and your PAKRATT or terminal program is up and running. Then change the following PK-232 parameters for 300 baud HF Packet. The VHF settings are also shown to make it easier to switch back to VHF when finished.

300 baud HF Packet		1200 baud VHF Packet	
SLOTTIME	8	SLOTTIME	30
PACLEN	64 or less	PACLEN	128
MAXFRAME	1	MAXFRAME	4
FRACK	15	FRACK	8
HBAUD	300	HBAUD	1200
VHF	OFF	VHF	ON

The last two of these commands are the most important.
If you fail to set the VHF parameter to OFF, the VHF modem will remain on and you will not be able to copy packets. Similarly, if you do not set the packet baud rate (HBAUD) to 300, you will be operating at a different speed than everyone else and not be able to copy any packets.

You should set MONITOR to 6 when you first try to tune in HF packet.

4.7.3 HF Receiver Settings

Set your HF receiver (or transceiver) to Lower Sideband (LSB) unless you connected your PK-232 through the direct FSK keying lines, in which case you should select the FSK operating mode. Adjust the volume to a comfortable listening level.

4.7.4 Tuning-in HF Packet Stations

Perhaps the most difficult thing about HF Packet operation is making sure the station you are talking to is tuned properly and stays tuned.

Since HF packet uses 200 Hz Frequency Shift Keying to send data (2110/2310 Hz), tuning accuracy is very important. Being off frequency by only 20 Hz makes a noticeable difference in the PK-232's ability to copy packet stations. Follow the tuning procedure below carefully for the best results in tuning in HF packet stations.

- Make certain your HF receiver is either in LSB or FSK depending on your PK-232 set-up.

- Turn any IF-Shift and Passband-Tuning controls to the Center or OFF position.

- Tune your receiver to 14.103 MHz (or another frequency where you know there is HF packet activity) and listen to the packets.

- Slowly vary VFO tuning knob on your receiver and look for a display on the PK-232 tuning indicator like the one shown below.

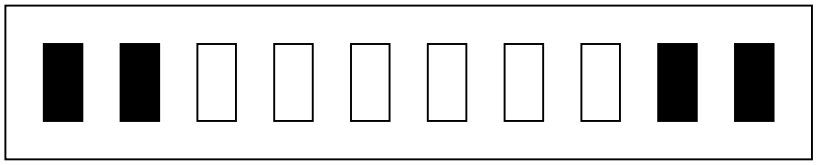

Tuned In

If the tuning indicator looks like the one below, the frequency from your speaker is too low for the PK-232 to copy packets. Slowly tune the VFO and make the frequency higher.

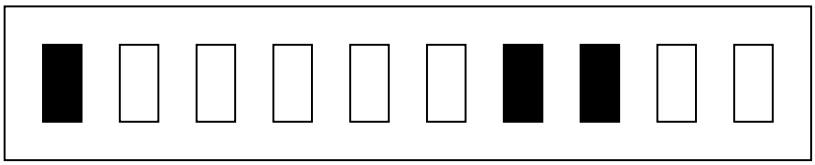

Frequency Too Low

3

If the tuning indicator looks like the one below, the frequency from your speaker is too high for the PK-232 to copy packets. Slowly tune the VFO and make the frequency lower.

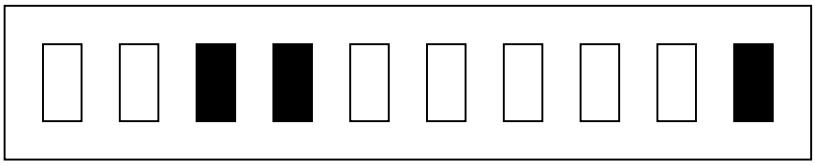

Frequency Too High

- Adjust the PK-232's front panel THRESHOLD control so that the DCD LED lights when a properly tuned packet is being received. You must also make certain that the DCD LED goes out when no packet signals are present on the frequency.

  After you have a packet station tuned in, you should start seeing HF packet stations on your display.

4.7.5 Transmitter Adjustments

Make sure your PK-232 is adjusted for your SSB transmitter as described in section 3.5 and 3.5.2 of this manual before transmitting.

These are very critical adjustments. If your PK-232's AFSK level and transmitter microphone gain are not adjusted properly, other stations will not be able to copy your packets. Check your plate or collector current or the power output of your rig before going on the air.

4.7.6 Going On The Air

Make sure your transmitter and antenna are tuned and adjusted for the band and operating frequency you are using.

On HF there are two ways you can go about talking to another station.

- First, you can look at the packets you have just MONITORED (or in your MHEARD list) and choose one of them to connect to.

- You can also "Call CQ" by entering the CONVERSE mode and pressing the <Enter> key a few times.

Either way you decide to go on the air, remember that things happen much more slowly on HF packet than they do on VHF and UHF packet. HF packet requires patience and careful tuning in order to be used successfully.

If you are having problems connecting to other HF packet stations, try working with an experienced HF packet operator in your area and listen to each other's signals. See if you can copy each other's packet signals. If he cannot copy your signals, have him listen to your signal in the CALIBRATE mode to make sure you are transmitting a pure tone. As mentioned earlier, any distortion caused by overmodulation or RF feedback will make your signal difficult or impossible to copy.

4.8 Advanced Packet Operation

You PK-232 has many commands and features that are not used for day-to-day connects conversations. Still, as you become more familiar with packet, some of these features may become important to you.

4.8.1 Transparent Mode

One of these features is the TRANSPARENT mode. The TRANSPARENT mode allows any 8-bit binary character to be sent by your packet station. You usually must use the TRANSPARENT mode to transfer binary and executable files to and from other stations.

You can either enter the TRANSPARENT mode by typing TRANS at the command prompt after you connect, or by setting the CONMODE command to TRANS. Either way, once you enter the transparent mode, any character you type will be sent automatically after the PACTIME setting. This way any character can be sent by the PK-232. Although we recommend using HARDWARE flow control in transparent mode, SOFTWARE flow control is available with the TRFLOW and TXFLOW commands.

To get back to Command mode after you are finished with transparent mode, you must type the COMMAND character (default <CTRL-C>) 3 times within the "Guard time" set by the CMDTIME command (default 1-second).

4.8.2 Sending 8-bit Data in Converse Mode

Sometimes you may need to send a file that contains some 8-bit data, but not need all the features of the TRANSPARENT mode. In this case, you may find turning the command 8BITCONV ON is all that is needed.

4.8.3 The ALTMODEM Command

The PK-232 has the ability to connect an optional 2400 bits/sec DPSK modem that can be factory installed. This command is ONLY used to select this modem if it has been installed.

4.8.4 The CFROM Command

If you ever want to limit the number of stations or exclude certain stations from connecting to you you may do so with the CFROM Command.

4.8.5 Operating in Full-Duplex

Most packet operation is carried on over Half-Duplex transceivers that can only transmit or receive but not do both at the same time. In some systems where a separate transceiver and receiver is used such as satellite operation you may want to take advantage of the FULLDUP Command in the PK-232.

4.8.6 Identifying as a digipeater

If your PK-232 is being used as the primary digipeater in a local area, you may want to enable the HID command. HID will automatically identify your station for others to see.

4.8.7 Digipeater Alias Callsign

If your packet station is being used as the primary digipeater in your local area, you may want to choose a simpler identifier for others to use with the MYALIAS Command.

4.8.8 Morse ID in Packet

In most countries packet is an accepted mode of identification so this command should be left OFF. In some countries however a Morse ID is required when packet is used and so the MID command should be enabled.

4.8.9 Sharing Packet Channels with Voice Operation

Although it is seldom needed, the PK-232 does have an input for SQUELCH information from a transceiver on the RADIO connectors. This input should be used and the SQUELCH command set if the packet channel is to be shared with voice operation.

4.8.10 Disabling Transmit Operation

Occasionally for test purposes it may be desired to disable the PTT circuit in the PK-232. This can be done with the XMITOK Command.

4.8.11 The Packet ORA Feature

The PK-232 recognizes UI frames with a destination field of 'QRA" and will respond by sending an ID packet. This is helpful for others new to your area that are looking for other packet stations to talk to. To disable this feature and remain anonymous, simply set user BIT 22 OFF (UBIT -12 OFF). The default is ON.

If you wish to see who is available in your local area, simply set your UNPROTO path to QRA and send a packet. Within 1 to 16 seconds other-stations should respond to your QRA request by sending an ID packet of their own. This feature is compatible with TAPR's QRA feature introduced in the 1.1.8 firmware release.

4.9 Seldom Used Commands

The following commands operate in Packet, but are seldom needed. They are listed for reference and described in the Command Summary.

Afilter BBsmsgs ONPerm CPactime Dcdconn Flow HEAderln
MDMon MRpt MXmit

4.10 Packet Lite HF Packet Protocol Extension

Amateur radio needs a better communications mode for HF operation. Baudot and ASCII have no provision for error detection. AMTOR FEC and ARQ are more resistant to errors, but do not carry the full ASCII character set. 300 baud AX.25 packet is undesirable because the long transmissions are prone to bit errors, any one of which invalidate the whole frame.

Packet Lite is, as its name suggests, an abbreviated form of packet. It is designed as a transparent extension to the AX.25 protocol that reduces the "overhead" of all HF packet frames without digipeaters. Packet Lite does not solve HF packets problems, but it should provide some throughput improvement on HF where it is desperately needed.

Timewave's engineering department is interested in hearing from Packet Lite users with any comments or suggestions on improving the protocol.

A Brief Description of the Packet Lite Protocol

The main feature of Packet Lite that reduces overhead is that it uses an address field of only 4 bytes. A standard AX.25 header without digipeaters uses 14 bytes of addressing. Shortening the packet frame header lessens the possibility of any given frame taking a hit.

Packet Lite reduces the length of an I-frame slightly, but its real strength is the shortening of the acknowledgment frames, resulting in fewer garbled acks and therefore fewer unnecessary retries. An ack (RR, RNR or REJ frame) in standard AX.25 consists of 19 consecutive bytes that must be copied with no hits; Packet Lite reduces the length to 9 bytes, or 47% of the standard ack length.

A couple of restrictions are necessary to accomplish this.
First, Packet Lite works only between two stations connected directly, with no digipeating allowed. If digipeaters are introduced to the address field, the advantage of the reduced overhead disappears.

Second, all Packet Lite connections emulate AX.25 version 2.0 (RR polling instead of retrying I-frames). This is necessary for the 10 minute identification described below. Also, the main reason version 1 continues to be used on HF is that on a retry a (RR,P) polling frame is BO long that one might as well just send the I-frame again. Packet Lite's polling and ack frames are so short that the AX.25 version 2.0 polling method is now worth doing.

4.10.1 Enabling Packet Life

To begin using Packet Lite, first make sure you have made all the proper HF Packet settings discussed earlier in this chapter. Be especially careful to ensure VHF is OFF and HBAUD is set to 300.

Once these settings have been made, to enable the Packet Lite protocol extensions, turn the PK-232 command LITE ON. You must not be connected to any other stations or you will not be allowed to change the LITE command.

Initiating a Packet Lite Connection

Once all the above settings have been made, simply issue the standard CONNECT request as described earlier in the chapter.

If the station you are connecting to also has the command LITE ON, a Packet Lite connection will result and you and the distant station should enjoy a more reliable QSO than others on the same frequency.

4.10.2 Compatibility With Standard AX.25 Stations

If the station you connect to does not have the Packet LITE protocol extensions, there are three known possibilities of what will occur.

```
1. WAlABC>WB2XYZ     [C,P]      01 3E 38 58 32   {Packet Lite attempt}
   WB2XYZ>WAlABC     (UA,F)                       {standard ack}
```

In this case, the non-Lite station sees the [C,P] control byte but ignores the non-standard bytes following it. It replies with a standard UA frame, and the connection proceeds as standard AX.25.

```
2. WAIABC>WB2XYZ     [C, P]     01 3E 38 58 32   {packet Lite attempt}
   WB2XYZ>WAlABC     (FR):      3F 00 03         {Frame Reject}
   WAIABC>WB2XYZ     (C, P]                      {Standard attempt}
   WB2XYZ>WAlABC     (UA, F)                     {Standard ack}
```

In this case, the non-Lite station notices the non-standard bytes following the control byte and issues a FP-MR (Frame Reject) to signify that a protocol violation has taken place. The PK-232 receives the FRMR and automatically reverts to standard AX.25, sending the connect retries without the Lite PID and address bytes.

```
3. WAlABC>WB2XYZ     [C, P] 01 3E 38 58 32        {Packet Lite attempt}
   …
```

In this case, the non-Lite station notices the non-standard bytes following the control byte but sends no response at all. If this occurs, you must turn the command LITE OFF and try to connect again to the distant station. No adverse effects are caused by this, but transparency with standard AX.25 is lost when the receiving station does not acknowledge a Packet Lite connect request in some manner.

We know that TCP/IP, NET-ROM and DRSI stations ignore Packet Lite Connect requests. These stations are normally found on VHF, but to be safe, the LITE command should be turned OFF when not in use.

4.10.3 Packet Lite Protocol Enhancement Summary

The following describes the Packet Lite protocol extension in detail for those interested in the technical details. It is not necessary to read or understand the following section to use the protocol.
Here is a summary of a Packet Lite exchange, where WALABC calls WB2XYZ:

Connect:

```
W  B  2  X  Y  Z  -0   W  A  I  A  B  C  -0   SABM  01  3E  38  58  32
    destination    |     source             | CTRL PID | short address
```

The destination and the source are both 7 bytes long. Everything up to the CTRL byte (SABM) is standard AX.25 version 2.0. The 'Protocol ID" of 01 hex is Packet Lite's reserved value, which provides a way of interpreting the following bytes. This leaves room for other extensions to AX.25 in the future. The short address bytes are the right-justified bytes of the address field that WAIABC proposes to use in subsequent Packet Lite frames with WB2XYZ. In this case, the AEA implementation of the short address is illustrated. 3E38 is a compressed version of the destination WB2XYZ and 5832 is a compression of WAIABC. However, any combination of 26 bits may be used (see "Technical Details" below).

Connect acknowledgment:

```
W  A  I  A  B  C  -0      W B 2 X Y Z -0      UA   01  58  32  3E  36
 destination          |      source       | CTRL  PID | short address
```

WB2XYZ replies to WALABC. Again, everything up to the CTRL byte (UA) is standard AX.25. The 'PID' of 01 and the short address confirm that WB2XYZ has accepted the Packet Lite connection. The short address is again the right-justified representation of the address field that WB2XYZ will be using in subsequent Packet Lite transmissions. In this case WB2XYZ has accepted the short address field suggested by WALABC, and has shown his acceptance by echoing the address back in reverse order (5832 = WALABC and 3E38 = WB2XYZ). AEA products always accept the short address from the SABM frame; however, the Packet Lite protocol allows the sender of the UA frame to propose a different combination of 26 bits, to avoid conflicting with another Lite QSO. In either case, the sender of the original SABM must accept the 26 bits in the UA frame, reversing the address order for its own transmission

Transmission of data:

```
  7C F0          B0 65            10            F0   Test <CR>
3E38 shifted  5832 shifted     [I, P; 0, 0]
short dest.   short source        CTRL          PID   text
```

WAIABC sends data to WB2XYZ in Packet Lite format. The address field consists of the short address from WB2XYZ's UA frame, reversed and left-shifted. The added bits come from AX.25 version 2.0's command and response bits, and the end-of-address bit.

Acknowledgment of data:

```
   BO 64           7C Fl              31
5832 shifted   3E38 shifted       (RR,F;l)
short dest.    short source         CTRL
```

WB2XYZ acknowledges the data from WALABC. The address field is reversed. This is the shortest length frame possible in Packet Lite. 4 address bytes + 1 CTRL byte + 2 flags + 2 CRC bytes = 9 bytes.

Every 10 minutes the stations must identify using both long and short addresses:

```
W B 2 X Y Z -0   W A 1 A B C -0   [RR,P;0]  01     3E 38 58 32
destination   |     source       |  CTRL   PID    | short address


W A 1 A B C -0   W B 2 X Y Z -0   (RR,F;1) 01      58 32  3E 38
destination   |     source       |  CTRL   PID    | short address
```

Either station may initiate the ID exchange.

Disconnect:

```
W B 2 X Y Z -0   W A I A B C -0   DISC   01        3E 38 58 32
 destination  |   source         |  CTRL    PID   | short address
```

Disconnect acknowledgment:

```
W A 1 A B C -0   W B 2 X Y Z -0    UA       01     58 32 3E 38
 destination  |     source       |  CTRL    PID   | short address
```

At the end of the connection, the two stations must once again identify using both long and short addresses.

Timewave firmware supporting Packet Lite also contains code that permits monitoring of Packet Lite and extended AX.25 frames.

Packet Lite Shortened Address Technical Details

The Packet Lite address field consists of 26 bits distributed over 4 bytes (or 'octets', as the AX.25 Spec calls them). These bits are considered to be two groups of 13 bits each, roughly equivalent to a destination and a source ID. If we label the bits A-Z and show their use in the address field of a Lite frame, the bits are distributed as follows:

```
A B C D E F G 0     x H I J K L M 0   N 0 P Q R S T 0   y U V W X Y Z 1
```

The least significant bit of each byte is used to show whether or not the byte is the final byte in the address field, as in standard AX.25. The bits "x" and "y" (lower case) have the function of command and response, similar to the function of the standard AX.25 version 2.0 SSID byte C bits (see AX.25 Protocol version 2.0, section 2.4.1.2).

In the Timewave implementation of Lite addressing, the standard callsigne are compressed to yield short addresses. The destination callsign is compressed into bit:a A-M, and the source into N-Z. These bits are used as the address field suggestion following the control byte in the Connect (SARH) frame. When the bits are used following the control byte as an ID suggestion or a real extended ID, the format is:

0 A B C D E F G 0 0 H I J K L M 0 N 0 P Q R S T 0 0 u v w x Y Z

If we label the 7 standard right-justified callsign bytes 1-6 and SSID, here is how we derive the first group of address-bits A-M:

```
ABCDE =  (byte 1 XOR  byte 4)             AND  $1F
FGHI =   (byte 2 XOR  byte 5)             AND  $0F
JKLM =   (byte 3 XOR byte 6 XOR SSID)     AND  $0F
```

Timewave firmware derives the second group of bits N-Z the same way. Other implementations are free to select any combination of 26 bits when setting up the short address in either the initial SABM frame or its UA response.

4.11 Packet Meteor Scatter Extension

A new packet protocol extension has been added for meteor scatter work that allows a Master/Slave packet connection to be established. This is done to reduce the possibility of simultaneous transmissions by both sides of a packet connection over a long meteor scatter path.

This experimental protocol is activated by turning User SIT 18 ON (UBIT 18 ON). When UBIT 18 is ON (default OFF) the packet station that initiates a packet connect will become the Master station and the station that acknowledges the connect becomes the Slave.

After a Meteor Scatter connection has been established, the Master station will continually send either information frames (I-frames) or polling frames and await an acknowledgment from the slave. The Master station therefore sends packets constantly, even if all its I-frames have been acknowledged. The slave station sends nothing, not even I-frames, until it receives a polling frame from the master. The Slave station may only send an I-frame to the Master after a poll frame has been received.

The packet timing of the Master station is critical for proper Meteor Scatter operation. In a normal AX.25 packet connect, the FRACK timer counts down until it reaches zero and then a Retry of a poll frame is sent. The FRACK timer counts in units of seconds however and a finer timing resolution is desirable for Meteor Scatter work. A new timer called FRICK has been added which times in 10 msec increments. The FRICK timer can be set from 0 (disabled) to 250 which corresponds to a time of up to 2.5 Seconds. See the Command Summary for a complete description of the FRICK timer.

The following settings are recommended for this method of Meteor Scatter work. Both packet stations should use these same settings.

UBIT IS ON
RETRY 0
AX25L2V2 ON (default)
MAXFRAME 1
(CHECK doesn't matter)
FRICK n, where n is large enough to allow the other station time to send the start of an
acknowledgment frame

Note:Do not operate the unit with multiple packet connections while FRICK is active (1-250). In contrast to FRACK, which provides one retry timer per multi-connect channel, there is only one FRICK timer in the PK-232. Each logical channel will try to use the same FRICK timer, causing interference to the operation of the other channels.

Digipeaters should not be used when in the Meteor Scatter mode. The FRICK timer (unlike FRACK) does not allow any extra time when digipeater stations are specified.

To return to normal A.X.25 packet operation turn User BIT 18 OFF. Also, be sure to disable the FRICK timer (by setting FRICK to 0) when you are through operating in Meteor Scatter mode.

CHAPTER 5

MAILDROP OPERATION

5.1 Overview of MailDrop Operation

The PK-232's MailDrop is a small, personal mailbox that uses a subset of the well-known WORLI/WA7MBL packet BBS commands to allow messages to be automatically sent and received. The MailDrop operates in the Packet, AMTOR and Pactor modes. When your MailDrop is active, distant stations can connect to your PK-232, leave messages for you or read messages from you. If the parameter 3RDPARTY is ON, then any station may leave a message for any other station.

The MailDrop also supports forwarding and reverse forwarding of Packet messages if properly coordinated with a local "full service" BBS. Hierarchical message addressing is now supported to simplify the routing of both national and international traffic.

5.1.1 RAM Space for Message Storage

Approximately 18K bytes of RAM are available to your MailDrop. RAM space is dynamically allocated so that it is possible to store as many messages as you like until all the memory is filled. If all 18K of RAM is used, the MailDrop displays the message "*** No free memory".

5.1.2 System Commands

MailDrop operation is completely under your "SYSOP" control from your local terminal or computer keyboard. Only you can start and stop MailDrop service. The commands shown below provide MailDrop control.

5.1.3 Your MailDrop Callsign

When operating in Packet, your MailDrop can have its own callsign that you enter with the MYMAIL command. If you do not enter a callsign in MYMAIL, the MailDrop will use MYCALL when it Is enabled. When operating the MailDrop in AMTOR, your 4 character MYSELCAL or 7 character MYIDENT is used and must be entered to access the MailDrop.

5.1.4 Start and Stop MailDrop Operation

Set MAILDROP to ON to start Packet MailDrop operation (default is OFF). This command activates or deactivates your Packet MailDrop. Set TMAIL ON to start AMTOR MailDrop operation. Again, the default is OFF.

5.2 Local Logon

Type MDCHECK to verify that you have local control of the MailDrop. You must not be connected or linked to any other stations to do this.

Once logged on to your MailDrop from your local keyboard, you are shown the MailDrop prompt as though you were the calling station:

```
[AEA PK-232M]     18396 free     (B,E,K,L,R,S) >
```

You can now EDIT, KILL, LIST, READ or SEND messages.

The number "18396 free" is the RAM available for MailDrop messages.

While you're "logged on" to your MailDrop, a connect request from another station will cause the PK-232 to send the "BUSY" frame to the distant station. When you are finished using your MailDrop, type "B" (BYE) to "log off" your MailDrop. This will return your PK-232 to normal operation and make the MailDrop available to other stations.

In Packet mode, you must leave the MAILDROP command ON to make it available for others. No other stations can reach your MailDrop unless the MAILDROP command is turned ON. In AMTOR, TMAIL must be ON.

You have full control of your PK-232 while the MAILDROP is ON. You can connect to others and carry on normal QSOs using the call sign in MYCALL provided you have entered a separate MYMAIL MailDrop callsign.

5.2.1 Monitor MailDrop Operation

Set MDMON to ON to monitor other stations' use of your MailDrop. Set MDMON OFF (default) to cancel MailDrop monitoring. User bit 13 allows MailDrop connect and status messages to be disabled as well. See the UBIT command in the command summary for specifics.

The MDMON command permits you to monitor a station's activity on your MailDrop showing you both sides of the QSO. Packet headers are not shown while a caller is connected to your MailDrop. When a caller is connected to the MailDrop, MCON determines what packets are monitored.

When your MailDrop is idle, MONITOR determines what packets are seen.

5.2.2 Caller Prompts

MTEXT is the MailDrop connect-message prompt sent to a packet station connecting to the MailDrop if MMSG is ON. The default message is:

```
"Welcome to my AEA PK-232M maildrop.
 Type H for help."
```

MDPROMPT is the Message prompt sent to a station by the MailDrop. This prompt is given to a station sending a message. You can enter any text with a maximum length of 80 bytes. The default prompt is:

```
"Subject:/Enter message, ^Z (CTRL-Z) or /EX to end"
```

You may wish to enter a CTEXT message announcing the presence of a mailbox and the call sign (MYMAIL) used to access your MailDrop.

5.3 SYSOP MailDrop Commands

While you have logged on to your MailDrop from your local keyboard with the MDCHECK command, the commands available to you are:

B, E, K, L, R, S.

These are the "standard" BBS commands available to the MailDrop SYSOP.

Any other command sent by you is answered with the error message "*** What?". A brief description of each command follows. All the available commands are described in detail following the next section.

B	BYE	Log off the MailDrop
E	EDIT	Edit a MailDrop message
K	KILL	Kill or delete messages
L	LIST	List the message directory
R	READ	Read a specific message
S	SEND	Send a message

5.4 Remote User MailDrop Commands

When a remote user has logged on to your MailDrop the following commands will be available to the distant station:

A, B, H, J, K, L, R, S, V, ?.

A brief description of each command follows.
These MailDrop commands are described in detail in the next sections.

A	ABORT	Aborts the reading of a long message
B	BYE	Log off the MailDrop
H	HELP	Help for the MailDrop commands
J	JLOG	Sends the PK-232MBX MHeard list
K	KILL	Kill or delete messages
L	LIST	List the message directory
R	READ	Read a specific message
S	SEND	Send a message
V	VERSION	Sends the PK-232MBX sign-on message
?	HELP	Help for the MailDrop commands

5.4.1 A (ABORT) (Remote only)

The "A" command aborts the Listing or Reading of messages by a calling station. This is handy if the remote user decides not to continue reading a long message. The message "*** Done" followed by the MailDrop prompt will be sent after an Abort has been received. On the local terminal the SYSOP may type the CANLINE character (default <CTRL-X>) to abort a long screen dump.

5.4.2 B (BYE)

The "B" command (Host abbreviation B1) logs the calling station (and you) off the MailDrop. A calling station will be disconnected; you will see the standard PK-232 "cmd:" prompt. The calling station may also simply disconnect.

5.4.3 E (EDIT #) (SYSOP only command)

The Edit command (Host abbreviation E1) is a powerful tool for controlling the status of messages on your MailDrop. The SYSOP must access the MailDrop before typing this command. Here are all possible ways to use this command:

```
E                    Shows the following short help file:
                          E  msg#
                          E  msg#  B/T/P
                          E  msg#  Y/N/F
                          E  msg#  >/</@  callsign

E 12                 Shows message 12's info line
E 23 > W0RM          Sets "W0RM" as message 23's destination
E 35 < WH1Z          Sets "WH1Z" as message 35's source
E 48 @ N7ML          Sets "N7ML" as message 48's destination BBS
E 49 @ N7ML.MT.NA    Sets "N7ML" as message 49's destination BBS
                     and adds the hierarchical forwarding
                     information .MT.NA signifying that N7ML BBS
                     is located in the state of Montana (MT)
                     which is located in North America (NA)
E 58 @               Clears message 58's destination BBS field
E 60 P               Sets message 60's status to Private
E 61 B               Sets message 61's status to Bulletin
E 62 T               Sets message 62's status to Traffic
E 63 Y               Sets message 63's status to Has-Been-Read
E 64 N               Sets message 64's status to Has-Not-Been-Read
E 49 F               Sets message 49's status to Reverse Forward
```

The command "E n F" sets the message status to enable Reverse Forwarding of a message number. To cancel forwarding, set the status to either "Y" or "N." Please read the section on Reverse Forwarding (below) if you are interested in this feature.

5.4.4 H (HELP) (Remote only command)

The "H" command sends the distant station a HELP list of all available MailDrop commands as shown below. The "?" will also cause the HELP file to be sent.

```
A(bort)   Stop Read or List
B(ye)     Log off
H(elp)    Display this message
J(log)    Display stations heard
K(ill)    K n: Kill message number n
          KM : Kill messages you have read
L(ist)    L  : List message titles
          LM : List messages to you
R(ead)    R n: Read message number n
          RM : Read all your unread messages
S(end)    S  : Send a message to SYSOP
          S n: Send a message to station n
V(ersion) Display TNC firmware version
?         Same as H(elp)
```

5.4.5 J (JLOG) (Remote only command)

The "J" command sent by the distant station will cause your MailDrop to send the PK-232's MHEARD List to the station. This command is not available to you the SYSOP since you can simply enter MHEARD at the PK-232 command prompt.

5.4.6 K n (KILL n [Mine])

The "K n" command (Host abbreviation K1) deletes message number "n" from the MailDrop. As SYSOP, you can kill any message. A calling station can kill only messages addressed to or from that station. Messages are killed by number, not call sign. The remote user may enter the "KM" (Kill Mine) command to KILL all of his or her messages that have been read previously.

5.4.7 L (LIST [Mine])

The "L" command (Host abbreviation L1) shows you the SysOp a list of ALL active messages on the MailDrop. The list is preceded by the following column header:

```
Msg#      Size To     From   @ BBS      Date       Time     Title
```

All active messages are listed under this line with the most recent message first. DAYTIME must be set for the Date and Time to appear.

When a remote user types the LIST command, the MailDrop lists only the messages that user may read, including messages to "ALL" and "QST." Messages to other users are not displayed. The MailDrop accepts the LM (List Mine) command from the remote user. This command acts only on messages addressed to the remote user, not messages to "ALL" or "QST."

5.4.8 R n (READ n [Mine])

The "R n" command displays the header and text of message number "n". Messages are read by number, not call sign. As SYSOP, you can read all messages. A remote user may READ only messages addressed to his call sign, or to "ALL" or "QST". The MailDrop accepts the RM (Read Mine) command from remote users. This command acts only on messages addressed to the remote user, not messages to "ALL" or "QST." The RM command displays only messages that have not been read previously.

5.4.9 S callsign (SEND callsign)

The "S callsign" command notifies the MailDrop that either you as SYSOP or the calling station will now send text into a message.

If 3RDPARTY is ON, then the calling station can leave a message for a station other than the SYSOP. If the station attempts to leave third party traffic with 3RDPARTY OFF, then the calling station will see:

```
*** No 3rd party traffic.
[AEA PK-232M]  18396 free  (A,B,H,J,K,L,R,S,V,?) >
```

If all 18K of the RAM is used, the MailDrop displays the message "*** No free memory". If there is room, the MailDrop displays the Subject request message prompt:

"Subject:"

Enter a short (up to 27 character) description of the subject of the message. The MailDrop will then send the message prompt:

"Enter message, ^Z (CTRL-Z) or /EX to end"

After entering the message there are two ways to end the message. Either the <CTRL-Z> may be entered followed by a carriage return, or the 3 characters "/EX" and a carriage-return on a line by itself will end the message being sent. After this the MailDrop prompt should appear indicating that the MailDrop is ready for another command.

After ending the message, if you or the calling party see the message "*** No free memory", this means that the message was too large for the available MailDrop memory and has been deleted. If this occurs, you must shorten the message to fit into available memory shown in the MailDrop prompt, and re-send the message.

When logged on from your local keyboard, if you use the "S" command without a call sign, you'll see the error message "*** Need callsign".

However, a calling station may use the S command without a call sign; it is understood that the message is directed to the PK-232's SYSOP.

As soon as a calling station uses the S command to send you (the SYSOP) a message, the STA light starts blinking to show that a message has been left for you. When you log on to your MailDrop with the MDCHECK command the STA LED will stop blinking.

5.4.9.1 Sending Other Types of Messages with SEND

Each message in the PK-232 MailDrop has a flag to show whether it is Private, Traffic or a Bulletin. A "P," "T" or "B" after the message number shows the status of every message. A user sets this with the SP, ST and SB forms of the Send command. The SYSOP may set this with the Edit (E) command described above. If only S is used as the Send command, the MailDrop will assign the message a Private (P) status.

The PK-232 MailDrop also accepts SEND commands of the form "SP SYSOP < W1AW." The call sign after the "<" goes into the "From" field of the message header.

For example, your MailDrop accepts the following additional information in a Send command:

S N7ML @ K6RFK < N6IA

The above means you want to send a message to N7ML who uses the K6RFK Bulletin-Board and the message is from N6IA.

The PK-232 MailDrop accepts hierarchical forwarding information that is helpful in reverse forwarding to full service BBS stations. An example of this is shown below:

SP N7ML @ K6RFK.WA.NA

The above means that you want to send a message to N7ML who uses the K6RFK Bulletin-Board which is located WAshington which is located in North America.

The PK-232 MailDrop also supports BIDs (Bulletin IDs). This support is required for Reverse Forwarding (see below). The BID begins with a "$" character and is sent and received in the Send command line:

```
     S N7ML @ K6RFK < N6IA $345_KB7B
```

With the PK-232 MailDrop you may also use just the "$" all by itself as shown in the two examples below:

```
     S N7ML @ K6RFK < N6IA $
or   S ALL $
```

In this case, the PK-232 MailDrop will assign its own BID to these messages.

5.4.10 V (VERSION) (Remote only command)

The "V" command causes the PK-232 to send the sign-on message and firmware date to the remote user only.

5.4.11 ? (HELP) (Remote only command)

The "?" command sends the distant station a HELP list of all available MailDrop commands shown above under the "H" command. Both the "?" and the "H" cause this same file to be sent to the remote user.

5.5 Sample MailDrop Session - The Remote User's Point of View

Let's see what the MailDrop looks like to a calling station. Let's assume that your call is "WX1AAA", and that you wish to connect and log on to "WX2BBB's" MailDrop system. During your session on his MailDrop, you wish to list the messages to see if there is a message for you, read it if it exists, kill it after you're done reading it, send a return message to WX2BBB and finally log off or disconnect from his MailDrop.

5.5.1 Connect and Logon

From the cmd: prompt, type the usual connect request:

```
cmd:c wx2bbb                                        {Connect request}
*** CONNECTED to WX2BBB                             {PK-232 status line}
You have mail                                       {informs the user
                                                     mail is waiting}
[AEA PK-232M]  16508 free  (A,B,H,J,K,L,R,S,V,?) > {MailDrop's prompt}
```

5.5.2 LIST Messages

You're logged on and have gotten the MailDrop's prompt:

```
[AEA PK-232M]  16508 free  (A,B,H,J,K,L,R,S,V,?) > {MailDrop's prompt}
```

Now, type "L" to LIST all the messages in the MailDrop.

```
L                                                   {The LIST command}
                                                {The MailDrop responds}
Msg#      Size To     From   @ BBS      Date       Time     Title
  6 PN     184 WX1AAA WX2BBB            01-Jun-90 20:15     Hello Joe
  5 BY     287 ALL    WX2BBB            01-Jun-90 18:42     Question
  4 BY     178 QST    WX2BBB            01-Jun-90 17:30     Mailbox
  1 BY      56 ALL    WX2BBB            01-Jun-90 10:22     APLINK
[AEA PK-232M]  16508 free  (A,B,H,J,K,L,R,S,V,?) > {MailDrop's prompt}
```

5.5.3 READ Messages

You've seen the list of messages and wish to READ yours. You've seen the MailDrop's prompt:

```
[AEA PK-232M]  16508 free  (A,B,H,J,K,L,R,S,V,?) > {MailDrop's prompt}
```

Now, type "R #" to READ the one message number to you in the MailDrop.

```
R 6                                                 {The READ 6 command}
                                                {The MailDrop responds}
Msg#      Size To     From   @ BBS      Date       Time     Title
  6 PN     144 WX1AAA WX2BBB            01-Jun-90 20:15     Hello Joe
                                                {The message header}
Hello Joe.  Did you get the notice           {The message}
about next month's meeting of the
Radio Society at the Firehouse?
Will you be going? - I need a ride.
73.

[AEA PK-232M]  16508 free  (A,B,H,J,K,L,R,S,V,?) > {MailDrop's prompt}
```

5.5.4 KILL Messages

You've read the message addressed to you and wish to KILL it. Again you see the MailDrop's prompt:

```
[AEA PK-232M]  16508 free  (A,B,H,J,K,L,R,S,V,?) > {MailDrop's prompt}
```

Now, type "K #" to KILL one specific message in the MailDrop.

```
K 6                                                 {The KILL 6 command}
*** Done.                                           {MailDrop confirms}
[AEA PK-232M]  16704 free  (A,B,H,J,K,L,R,S,V,?) > {MailDrop's prompt}
```

5.5.5 SEND Messages

You've killed the message and wish to SEND a reply to the MailDrop's operator, WX2BBB. Again you see the MailDrop's prompt. Remember the number after the right bracket "]" shows you how much memory space is available in the MailDrop. Always verify that the MailDrop has enough memory remaining for the length of message you intend to send.

```
[AEA PK-232M]  16704 free  (A,B,H,J,K,L,R,S,V,?) > {MailDrop's prompt}
```

Now, type "S [callsign]" to SEND a message to the MailDrop's SYSOP. If you omit the call sign, the MailDrop will address the message to the MYMAIL or MYCALL call sign. Messages sent with the S command are considered Private unless they are sent to "ALL" or to "QST".

```
S WX2BBB                                {The "SEND callsign" command}
Subject:                                {MailDrop's Subject prompt}
I WILL BE GOING                         {Your subject entry}
Enter message, ^Z (CTRL-Z) or /EX to end     {MailDrop answers you}

YEAH, I GOT THE MAILING AND WILL        {Type your message to WX2BBB}
BE GLAD TO PICK YOU UP.  WHAT TIME
DO YOU WANT ME THERE?  IS MARY
GOING?  CUL. WX1AAA
/EX                                     {End the message with /EX}

[AEA PK-232M]  16508 free  (A,B,H,J,K,L,R,S,V,?) > {MailDrop's prompt}
```

NOTE: If the message was ended with the "/EX", the last line will contain a "/E" when the message is read. To avoid this, use the <CTRL-Z> to end messages.

5.5.6 Log Off and Disconnect

You're finished with this session. Time to log off the MailDrop.

```
[AEA PK-232M]  16508 free  (A,B,H,J,K,L,R,S,V,?) > {MailDrop's prompt}
```

Now, type "B" (for Bye) to LOG OFF the MailDrop.

```
B                                                {The Bye command}
```

The MailDrop issues an immediate disconnect command to your PK-232 and the connection is over.

```
*** DISCONNECTED                             {PK-232's status line}
```

5.6 Sample MailDrop Session - MailDrop SYSOP's Point of View

Here is a transcription of the entire session described in the previous section, exactly as it would appear to the MailDrop's operator (SYSOP). We're assuming that the MDMON command is set to ON.

When MDMON is ON, you have the ability to supervise the activities of any station logged on to your MailDrop and - if needed - take any corrective action.

```
WX1AAA>WX2BBB <C,P>
You have mail
[AEA PK-232M]  16508 free  (A,B,H,J,K,L,R,S,V,?) >
*** CONNECTED to WX1AAA (Maildrop)
```

```
Msg#      Size To     From   @ BBS      Date       Time     Title
  6 PN     184 WX1AAA WX2BBB            01-Jun-90 20:15     Hello Joe
  5 BY     287 ALL    WX2BBB            01-Jun-90 18:42     Question
  4 BY     178 QST    WX2BBB            01-Jun-90 17:30     Mailbox
  1 BY      56 ALL    WX2BBB            01-Jun-90 10:22     APLINK
  [AEA PK-232M]  16508 free  (A,B,H,J,K,L,R,S,V,?) >
  R 6
Msg#      Size To     From   @ BBS      Date       Time     Title
  6 PN     184 WX1AAA WX2BBB            01-Jun-90 20:15     Hello Joe

  Hello Joe.  Did you get the notice
  about next month's meeting of the
  Radio Society at the Firehouse?
  Will you be going? - I need a ride.
  73.

  [AEA PK-232M]  16508 free  (A,B,H,J,K,L,R,S,V,?) >
  K 6
  *** Done.
  [AEA PK-232M]  16704 free  (A,B,H,J,K,L,R,S,V,?) >
  S WX2BBB
  Subject:
  I WILL BE GOING
  Enter message, ^Z (CTRL-Z) or /EX to end

  YEAH, I GOT THE MAILING AND WILL
  BE GLAD TO PICK YOU UP.  WHAT TIME
  DO YOU WANT ME THERE?  IS MARY
  GOING?  CUL. WX1AAA
  /EX

  [AEA PK-232M]  16508 free  (A,B,H,J,K,L,R,S,V,?) >
  B
  *** DISCONNECTED
```

5.6.1 Message Numbers

Any message that is sent to the PK-232 MailDrop by a remote user or you, the SYSOP is given a message number. Message numbers start at 1 and over time work their way up to 999 and then wrap back around to 1 again. Sometime it is desirable to reset the message counter. This can be done with the LASTMSG command which is described in the Command summary.

5.7 Forwarding and Reverse Forwarding with the PK-232 MailDrop

Forwarding allows your large community Bulletin Board System (BBS) may automatically connect to your MailDrop and send messages to you. Similarly, Reverse Forwarding allows your community BBS to connect to your MailDrop and get messages you wish to send to others.

Forwarding and Reverse Forwarding (or simply Auto-Forwarding) can be an advantage in a local area. The community BBS can be set to connect to your MailDrop at times when local traffic is low, such as late at night. This can spread out the traffic volume on a packet frequency which can become quite heavy in the "prime time" early evening hours.

Auto-Forwarding is involved and requires the cooperation of both you and your community BBS Operator. Not all large BBSs will forward to individual users. Some packet frequencies are so busy forwarding to other BBSs that they can not forward to individuals. You must contact the community BBS SYSOP to determine the guidelines in your area.

5.7.1 MailDrop Settings for Auto-Forwarding

The following must all be set properly for Auto-Forwarding to operate.

- Enter your MYCALL. Enter your MYMAIL if you desire to use a separate call sign for the MailDrop.

- Make arrangements with your local BBS SYSOP to Auto-Forward to your MailDrop. Make sure you let him know the MailDrop call sign you will use. The BBS SYSOP must program his system to connect to your MailDrop or Auto-Forwarding will not function.

- Enter the call sign of this community BBS in the HOMEBBS command.

- Leave your PK-232 and radio ON THE AIR so that your local BBS can connect to your MailDrop. If your packet station is not on when the local BBS tries to connect, the advantage of Auto-Forwarding is lost and the BBS SYSOP may drop you from the Forwarding list.

Once the above have been completed, you are ready to receive messages automatically from your local BBS. The next section describes how to prepare messages for Reverse Forwarding to the local BBS (HOMEBBS).

5.7.2 Entering a Message for Reverse Forwarding

To prepare a message for Reverse Forwarding to another station:

- Type MDCHECK to access your MailDrop from your terminal.

- Using the Send command, type the message you want forwarded. Use the "@" field to set the destination BBS where the addressee will pick up his mail. For example if you want to send a message to N6UND who you know uses the BBS N6IIU enter the following:

```
S N6UND @ N6IIU.CA.NA
```

Note that the "@" call sign does not need to be the same as the HOMEBBS call sign. The "@" call sign can be typed as part of the Send command or as part of the Edit command described earlier.
The ".CA.NA" is optional "Hierarchical forwarding" information that in this case designates that N6IIU is located in the state of California.

- Enter the Subject and text of the message as described above in the Send command section. Don't forget to end your message with <CTRL-Z> or "/EX" on its own separate line also described above.

- Use the Edit command to set the Forwarding flag for each message that will be Reverse Forwarded to HOMEBBS. This is described in the Edit command section above. For example the following will mark message number 53 for Reverse Forwarding.

  E 53 F (Sets Reverse Forwarding for message 53.)

- Log off your MailDrop with the B (Bye) command.

- If you wish each message to disappear as it is Reverse Forwarded, leave KILONFWD ON. If you wish to keep each message after it has been Forwarded, turn KILONFWD OFF. After forwarding, the message flag will change from "F" to "Y" to show that it has been read.

CHAPTER 6

BAUDOT AND ASCII RTTY OPERATION

6.1 Overview

Baudot (pronounced Bod-dough) has been around for many years. The five bit Baudot/Murray code was the basis of the Western Union Telex service and Baudot RTTY (Radio TeleTYpe) is still widely used on the HF amateur bands. The Baudot character set contains the upper-case letters, the numbers 0-9 and some common punctuation characters. Because Baudot has only five bits, it is less prone to errors than seven bit ASCII. Your PK-232 provides Baudot RTTY at all the standard speeds in use today, including all commercial speeds up to 300 bauds.

ASCII; the American Standard Code for Information Interchange (pronounced Ask-kee) has been around for nearly 30 years. ASCII is a 7-bit code and was designed to overcome the limitations of the Baudot character set by including both upper and lower case letters, numbers, all punctuation as well as many computer control codes. ASCII is not so popular on the amateur bands, but its operation is almost identical to Baudot RTTY so we will describe them both in this chapter.

6.2 Where to Operate Baudot and ASCII RTTY

Before you can operate Baudot or ASCII RTTY, you must first know where the activity is. Most RTTY operation occurs on the 20-meter amateur between 14.08 and 14.10 MHz. RTTY activity can be found on the other HF amateur bands as well and is most often located between 80 and 100 KHz up from the bottom of the band as it is on 20 meters.

6.2.1 PK-232 Baudot RTTY Parameter Settings

First you must enter the Baudot mode of the PK-232.
If you are using a Timewave or AEA PAKRATT program, follow the instructions in the program manual to enter the Baudot mode.

If you are using a terminal, simply type "BAUDOT" or "BA" from the Command Mode followed by the <Enter> key to enter the Baudot mode. The PK-232 responds by displaying the previous mode:

```
Opmode   was PAcket
Opmode   now BAudot
```

Your PK-232's front panel will show the CMD and BAUDOT LEDs lit.

The following parameters are the most common settings for HF Baudot operation. Check the parameters and make sure they are set as follows:

```
RBAUD     45 (this is the most common amateur speed on HF)
RXREV     OFF
TXREV     OFF
WIDESHFT  OFF
```

6.2.2 HF Receiver Settings

Set your HF receiver (or transceiver) to Lower Sideband (LSB) unless you connected your PK-232 through the direct FSK keying lines. In this case, you should select the FSK operating mode. Adjust the volume to a comfortable listening level.

6.2.3 Tuning in Baudot and ASCII Stations

Tuning in Baudot and ASCII stations properly is critical to successful operation. Since HF Baudot and RTTY stations use either 170 Hz or 200 Hz Frequency Shift Keying to send data, tuning accuracy is very important. Follow the tuning procedure below carefully for the best results in tuning HF Baudot and ASCII stations.

- Make certain your HF receiver is either in LSB or FSK depending on your PK-232 set-up.
- Turn any IF-Shift and Passband-Tuning controls to the Center or OFF position.
- Tune your receiver carefully between 14.08 and 14.10 MHz (or another band where you know there is Baudot or ASCII activity) and listen for RTTY stations.
- When you find a station, slowly vary VFO tuning knob on your receiver and look for a display on the PK-232 tuning indicator like the one shown below.

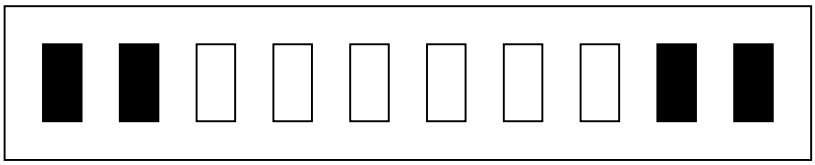

Tuned In

If the tuning indicator looks like the one below, the frequency from your speaker is too low for the PK-232 to copy the signal. Slowly tune the VFO and make the frequency higher.

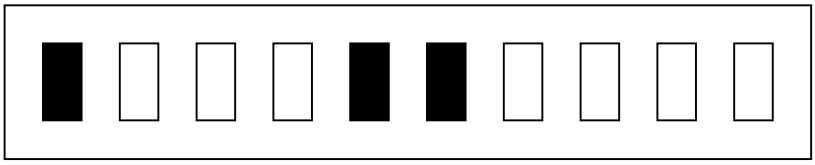

Frequency Too Low

If the tuning indicator looks like the one below, the frequency from your speaker is too high for the PK-232 to copy the signal. Slowly tune the VFO and make the frequency lower.

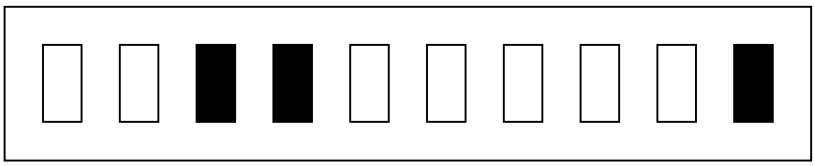

Frequency Too High

- Adjust the PK-232's THRESHOLD control so that the DCD LED lights when a properly tuned RTTY station is being received.

HINT: If you adjust the THRESHOLD control so the DCD LED goes out when no station is being received, you will prevent garbage characters generated by noise from printing on your screen.

After you have an ASCII or RTTY station tuned in, you should start seeing the copy printing on your screen.

If the text you are receiving is garbled, you may be tuned to a transmission at a different baud rate. Either try tuning in a different station, or see Chapter 10 on SIGNAL IDENTIFICATION to let the PK-232 determine the kind of station you are listening to.

6.3 Transmitter Adjustments

Make sure your PK-232 is adjusted for your SSB transmitter as described in section 3.5 and 3.5.2 of this manual before transmitting.

These are very critical adjustments. If your PK-232's AFSK level and transmitter microphone gain are not adjusted properly, other stations will not be able to copy your signals. Check your plate or collector current or the power output of your rig before going on the air.

6.3.1 Going On The Air

Make sure your transmitter and antenna are tuned and adjusted for the band and operating frequency you are using. If you are using an AEA PAKRATT program, see the program manual for the proper way to place the PK-232 into RTTY transmit mode.

If you are using a terminal or terminal program, the following will place your PK-232 and transceiver into the transmit mode.

- Type "X" for XMIT and then press the <Enter> key to key your transmitter and automatically enter the Converse mode.

As soon as you type the <Enter> key you will be transmitting. At this point you are also in the CONVERSE mode and anything you type will be sent in Baudot by your transmitter.

When you are finished transmitting, use one of the following methods to return to receive.

- Type <CTRL-D> to shut off your transmitter and return to the Command Mode.

- Type <CTRL-F> to send a Morse ID and shut off your transmitter and return to Command Mode.

- Type <CTRL-C> to return to the Command Mode and then type "R" to shut down your transmitter and end the contact.

See the following sections for a sample QSO as well as some Baudot operating hints.

6.4 A Typical Baudot RTTY Contact

As with most amateur operating modes, you can start a contact either by "calling CQ" or by answering a "CQ" call by another station.

6.4.1 Calling CQ

To call CQ first you must tell your PK-232 to start transmitting.

- Type "X" to key your transmitter and start the PK-232 sending.

- Type in your CQ message (use YOUR callsign) such as the one below:

  CQ CQ CQ CQ CQ CQ CQ DE YOURCAL YOURCAL YOURCAL
  CQ CQ CQ CQ CQ CQ CQ DE YOURCAL YOURCAL YOURCAL
  CQ CQ CQ CQ CQ CQ CQ DE YOURCAL YOURCAL YOURCAL
  CQ CQ CQ CQ CQ CQ CQ DE YOURCAL YOURCAL YOURCAL K
  <CTRL-D>

- Type <CTRL-D> at the end of your CQ call. The <CTRL-D> puts both your radio and the PK-232 into the receive mode.

- Wait a bit to see if you get a response. If not, you can repeat the above procedure.

6.4.2 Answering a CQ

Let's assume you hear KZ7G calling CQ. To answer, do the following:

- Type "X" to key your transmitter and start the PK-232 sending.

- Call the other station by giving his call followed by your call, (KZ7G DE YOURCAL). Start the transmission with a line of RYs as a tuning signal for the distant station. Here's an example:

  RYRYRYRYRYRYRYRYRYRYRYRYRYRYRYRYR
  KZ7G KZ7G KZ7G DE YOURCAL YOURCAL YOURCAL
  KZ7G KZ7G KZ7G DE YOURCAL YOURCAL YOURCAL
  KZ7G KZ7G KZ7G DE YOURCAL YOURCAL YOURCAL
  <CTRL-D>

  (If the other station can't copy these four lines of text, the chances are he won't copy any more than that. No need to waste time and bandwidth by typing 15 or 20 lines of the same thing.)

- Type <CTRL-D> at the end of your call. The <CTRL-D> puts both your radio and the PK-232 into the receive mode.

Always end every transmission with a carriage return to force the distant station's screen cursor or teleprinter back to the left margin on a new line. It's a good operating habit that keeps things neat.

- Wait a bit to see if you get a response. If not, you can repeat the above procedure.

6.5 Baudot RTTY Operating Tips

The PK-232 can automatically determine the speed of the received signals with the SIGNAL IDENTIFICATION (SIAM) mode. However, you can manually step through all the available RTTY receiving speeds with the RBAUD command.

The following "Function Keys" and immediate commands are included for Baudot RTTY operating convenience.

Immediate Commands from the Command Mode:

"L"	Forces LETTERS case.
"N"	Forces FIGURES case.
"R"	Switches system to receive mode, forces LETTERS case.
"X"	Switches system to transmit mode and forces immediate entry into Converse mode.
"K"	Load Transmit type ahead buffer.

"Function Key" characters embedded in transmitted text:

<CTRL-B>	Sends AAB string as a HEREIS message.
<CTRL-E>	Sends "Who Are You" request to distant station.
<CTRL-O>	Sends LETTERS shift character.
<CTRL-N>	Sends FIGURES shift character.
<CTRL-D>	Shuts off transmitter after sending character buffer.
<CTRL-F>	Sends call sign in Morse and shuts off transmitter.
<CTRL-T>	Sends the Time if the DAYTIME clock has been set.

6.5.1 Changing Speed

Assume you've been receiving at 45 bauds and wish to increase the baud rate in steps. From the Command mode, type RB U followed by an <Enter>. The PK-232 responds with:

```
RBaud   was 45
RBaud   now 50
```

The RBAUD command sets the Baudot RTTY speed. The most common speed is 45 bauds on HF, but other speeds including commercial speeds are supported. See the Command Summary for all the supported speeds.

6.5.2 Entering Your Auto-AnswerBack

Baudot RTTY allows you to request the identity of the station you are conversing with by sending your PK-232 the <CTRL-E> character. This causes the PK-232 to send a FIGS-D request to the other station.

For this reason, you should set your own Auto-AnswerBack (AAB) message to either "DE YOUR-CALL" or "QRA YOUR-CALL". See the Command summary. If you then turn your own WRU command, your PK-232 will automatically respond by sending the AAB message when another station requests your identity in Baudot and then stops sending.

6.5.3 Formatting Your Transmitted and Received Text

The default configuration of the PK-232 RTTY parameters are designed for natural conversation and traffic. Sometimes it is desired to alter how your typed text looks on the screen of the station you are talking to. The commands ACRRTTY and ALFRTTY allow for customizing the Carriage Return and Linefeed characters in your transmitted text.

To allow for changing how received text is displayed on your screen or printer, see the ACRDISP and ALFDISP commands in the Command Summary.

MARS operators have some special requirements for RTTY operation and displaying text. To accommodate these, the CRADD and MARSDISP commands are included and should be reviewed in the Command Summary.

6.5.4 Sending a Synchronous Idle or DIDDLE

Some RTTY users like to send an idle signal when no data is being transmitted. To allow for this the PK-232 has the DIDDLE command. See the Command Summary for more information.

6.5.5 Echoing Transmitted Characters As Sent

Since Baudot RTTY at 45 baud is rather slow, some users like to know just when the characters they are actually being sent. The EAS command when turned ON will Echo characters to the display only when they are sent over the air.

6.5.6 Sending Only Complete Words

Some RTTY users like to have their words sent out only when they are complete. This allows the word you are currently typing to be edited as long as you have not typed a <Space> character. Turning WORDOUT ON activates this feature. See the Command Summary for more information.

6.5.7 Operating on the Wrong Sideband

In RTTY operation it is important to be operating on the correct sideband, otherwise other stations will not be able to copy your transmissions. If you find another station operating on the wrong sideband, you can reverse your receive sense with the RXREV command so you will not have to change sidebands yourself.

Similarly, if someone tells you that you are on the wrong sideband, you can correct your transmit signal sense with the TXREV command. See the Command summary for more information on these commands.

6.5.8 Unshift-On-Space (USOS)

The Unshift-On-Space (USOS Command) automatically changes the received Baudot/Murray code characters to the LETTERS or lower case condition after any "space" character is received.

When operating Baudot RTTY under poor conditions, a received LETTERS-SHIFT character can be garbled, or another character can be wrongly interpreted as a FIGURES-SHIFT character. Turning USOS ON helps reduce reception errors under these conditions.

Some commercial, weather and utility RTTY services send groups of numbers separated by spaces. When receiving such non-amateur signals, USOS should be OFF to prevent displaying LETTERS-shifted characters when the originator may have intended the data to be FIGURES-shifted.

6.5.9 Operating at Commercial or VHF Wide RTTY Shifts

Most commercial stations found in the non amateur Short Wave bands operate with a wide Frequency Shift keying of either 425 or 850 Hz shift. To allow these stations to be received the WIDESHFT command must be turned ON. If your license permits, you can also transmit to these stations when WIDESHFT is ON.

6.5.10 The CODE Command for International RTTY Compatibility

The CODE command allows the PK-232 to receive (and sometimes send) other RTTY character sets. Part 97.69 of the FCC rules specifies that the International Telegraph Alphabet Number 2 (ITA #2) must be used by U.S. stations when operating RTTY. This corresponds to the CODE 0 command (default), but you may want to see the CODE command for more information on what your PK-232 is capable of.

6.5.11 Copying Encoded RTTY Transmissions

In the Short Wave bands many RTTY stations can be found that are not transmitting in plain text. Most of these stations are using sophisticated encryption techniques that make receiving them almost impossible. There are a few stations however that use a relatively simple bit-inversion technique to make them hard to copy. For these stations, the PK-232 has included the BITINV command to allow the SWL to decode these simple forms of encoded RTTY stations.

6.6 ASCII RTTY Operation

ASCII RTTY operation is almost identical to Baudot operation but there are a few differences you must know. Because the ASCII code uses seven bits to define a character (instead of the five bits used in the Baudot/Murray code), the probability of receiving errors is somewhat higher. For these reasons, ASCII is not used widely on the HF amateur bands. However, some commercial and military HF stations do use ASCII.

6.6.1 Starting ASCII Operation

First you must enter the ASCII mode of the PK-232.
If you are using an AEA PAKRATT program, follow the instructions in the program manual to enter the ASCII mode.

If you are using a terminal, simply type "ASCII" or "AS" from the Command Mode followed by the <Enter> key to enter the ASCII mode. The PK-232 responds by displaying the previous mode:

```
Opmode   was BAudot
Opmode   now AScii
```

Your PK-232's front panel will show the CMD and ASCII LEDs lit.

The following parameters are the most common settings for HF ASCII operation. Check the parameters and make sure they are set as follows:

```
ABAUD     110 (or whatever speed you wish)
RXREV     OFF
TXREV     OFF
WIDESHFT  OFF
```

Some VHF Bulletin Boards and MSOs use ASCII at 110 and 300 bauds, most commonly on two meters.

6.6.2 ASCII RTTY Operating Tips

Follow the general operating procedures shown in the sections above for Baudot RTTY. As in Baudot operation, you can step the system through all the available receiving speeds.

The following "Function Keys" and immediate commands are included for ASCII RTTY operating convenience.

Immediate Commands From the Command Mode:

"R"	Switches system to receive mode.
"X"	Switches system to transmit mode and forces immediate entry into Converse mode.
"K"	Load Transmit type ahead buffer.

"Function Key" characters embedded in transmitted text:

<CTRL-B>	Sends AAB string as a HEREIS message.
<CTRL-D>	Shuts off transmitter after sending character buffer.
<CTRL-E>	Sends "Who Are You" request to distant station.
<CTRL-F>	Sends call sign in Morse and shuts off the transmitter.
<CTRL-T>	Sends the Time if the DAYTIME clock has been set.

6.6.3 Changing ASCII Baud Rates

Assume you've been receiving at 110 bauds and wish to increase the baud rate in steps. From the Command mode, type AB U followed by an <Enter>. The PK-232 responds with:

```
ABaud   was 45
ABaud   now 50
```

The ABAUD command sets the ASCII RTTY speed. The most common speed is 110 bauds on HF, but other speeds including commercial speeds are supported. See the Command Summary for all the supported speeds.

6.6.4 Other RTTY Commands for ASCII Operation

Many of the commands mentioned above in the Baudot Section also operate in the ASCII RTTY mode as well. They are listed below:

AAB	ACRDISP	ALFDISP	DIDDLE	EAS	RXREV
TXREV	WIDESHFT	WORDOUT	WRU		

CHAPTER 7

AMTOR AND NAVTEX OPERATION

7.1 Overview

The PK-232 provides AMTOR operation in accordance with FCC Part 97.69 and CCIR Recommendations 476-2/476-3 and 625 for Mode A (ARQ) and Mode B (FEC) modes. AMTOR is an adaptation of the SITOR system used in high-seas ship telex, which provides error detection and correction.

AMTOR has two basic modes of operation, Mode A (ARQ - Automatic ReQuest for Reception) and Mode B (FEC - Forward Error Correction).

- o ARQ AMTOR is a handshaking protocol that allows only two stations to communicate in a near error free fashion. You will hear a "chirp chirp" sound when you find two stations conversing in ARQ.

  AMTOR Mode A (ARQ) is the perhaps the most error-free method of getting messages through on HF when conditions are poor.

- o FEC AMTOR is similar to Baudot RTTY and is used to call CQ or to carry on "round table" contacts.

NAVTEX is a form of FEC AMTOR that is used to send Navigational bulletins and weather information primarily to ships at sea. Recently it has been adopted by the ARRL to send bulletins to amateurs.

7.2 Where to Operate AMTOR

Before you can operate AMTOR, you must first know where the activity is. Most AMTOR operation occurs on the 20-meter amateur between 14.065 and 14.085 MHz. AMTOR activity can be found on the other HF amateur bands as well and is most often located between 65 and 90 KHz up from the bottom of the band as it is on 20 meters.

7.2.1 PK-232 AMTOR Parameter Settings

AMTOR is a bit more complex than Baudot or ASCII operation. AMTOR operating modes require SELCALL (Selective Call) codes be entered before you can operate. There are two SELCALLs you should enter.

7.2.2 Entering Your SELective CALling Code (MYSELCAL)

This unique character sequence contains four alphabetic characters that are derived from your call sign. The PK-232 will automatically do this for you just by entering your amateur callsign into the MYSELCAL command. If you are using an AEA PAKRATT program, follow the instructions in the program manual for entering the command MYSELCAL.

If you are using a terminal, then Type "MYSELCAL" to load your SELCALL into the PK-232 as shown below:

```
cmd:MYSELCAL N7ML
```

The PK-232 will tell you, MYSelcal now NNML

See the MYSELCAL command in the Command Summary if you are interested in more information on the translation process.

Because the same call sign sequences are assigned in ten districts, it is possible that your SELCALL could be used by another station. If you think a station in another call district is also active on AMTOR and is using the same SELCALL, see the MYSELCAL command for information on how to change your Selcall.

7.2.3 Entering Your SELective CALling Code (MYIDENT)

At the present time, most of the AMTOR activity on the amateur bands is using the four-character SELCALL defined in CCIR 476 and described above. The seven-character SELCALL (MYIDENT) defined in CCIR 625 solves the problem of non-unique SELCALLs by providing many more possible SELCALLs than CCIR 476 does with four-character SELCALLs.

To enter your seven-character SELCALL all you must do is enter your amateur callsign. The PK-232 will do the translation for you.

If you are using an AEA PAKRATT program, follow the instructions in the program manual for entering the command MYIDENT.

If you are using a terminal, then enter the following

```
cmd:MYIDENT N7ML
```

The PK-232 will tell you, MYIdent now VTMFFFF

See the MYIDENT command in the Command Summary if you are interested in more information on the translation process.

7.2.4 Enter the AMTOR Mode

Now that you have entered your personal MYSELCAL and MYIDENT Selective Calling codes, you are ready to enter the AMTOR mode.

If you are using an AEA PAKRATT program, follow the instructions in the program manual to enter the AMTOR mode.

If you are using a terminal, simply type "AMTOR" or "AM" from the Command Mode followed by the <Enter> key to enter the AMTOR mode. The PK-232 responds by displaying the previous mode:

```
Opmode   was PAcket
Opmode   now AMtor
```

Your PK-232's front panel will show the two STBY LEDs lit.

7.2.5 HF Receiver Settings

Set your HF receiver (or transceiver) to Lower Sideband (LSB) unless you connected your PK-232 through the direct FSK keying lines. In this case, you should select the FSK operating mode.
Adjust the volume to a comfortable listening level.

7.2.6 Tuning in AMTOR Stations

Tuning in AMTOR stations properly is critical to successful operation.

Since HF AMTOR stations use either 170 Hz or 200 Hz Frequency Shift Keying to send data, tuning accuracy is very important. Follow the procedure below for the best results.

- o Make certain your HF receiver is either in LSB or FSK depending on your PK-232 set-up.
- o Turn any IF-Shift and Passband-Tuning controls to the Center or OFF position.
- o Tune your receiver carefully between 14.065 and 14.085 MHz (or another band where you know there is AMTOR activity) and listen for the "chirp chirp" of ARQ or the steady data of FEC stations.

NOTE: When in the AMTOR Standby mode as you are now, you will not be able to print the "chirping" ARQ signals. To print these stations, you must be in the AMTOR Listen (ALIST) mode.

- o When you find a station, slowly vary VFO on your receiver and look for a display on the PK-232 tuning indicator as shown below.

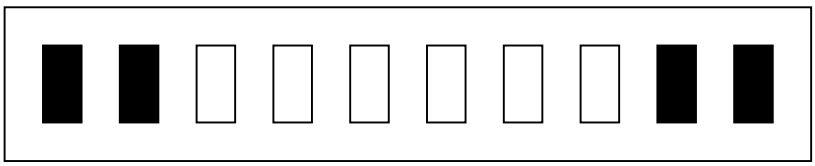

Tuned In

If the tuning indicator looks like the one below, the frequency from your speaker is too low for the PK-232 to copy the signal. Slowly tune the VFO and make the frequency higher.

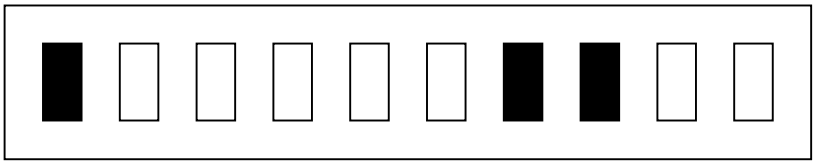

Frequency Too Low

If the tuning indicator looks like the one below, the frequency from your speaker is too high for the PK-232 to copy the signal. Slowly tune the VFO and make the frequency lower.

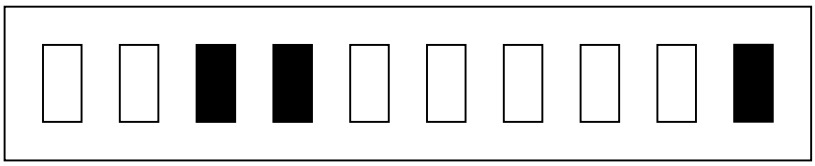

Frequency Too High

- o Adjust the PK-232's THRESHOLD control so that the DCD LED lights when a properly tuned FEC AMTOR station is being received.

After you have an FEC AMTOR station tuned in, you should start seeing the copy on your screen. If you have tuned in "chirping" ARQ AMTOR stations, you will not print anything until you enter the ALIST mode. If you just want to receive, see Chapter 10 on SIGNAL IDENTIFICATION.

7.3 Transmitter Adjustments

Make sure your PK-232 is adjusted for your SSB transmitter as described in section 3.5 and 3.5.2 of this manual before transmitting.

These are very critical adjustments. If your PK-232's AFSK level and transmitter microphone gain are not adjusted properly, other stations will not be able to copy your signals. Check your plate or collector current or the power output of your rig before going on the air.

7.3.1 Going On The Air

Make sure your transmitter and antenna are tuned and adjusted for the band and operating frequency you are using. Before you transmit, you must decide if you are going to "call CQ" or answer someone's CQ call.

7.3.2 Calling CQ in FEC AMTOR

If you plan to make a CQ call, you must do so in the FEC AMTOR mode. This is required since an ARQ AMTOR transmission requires another station to "Link-up" with. If you are using an AEA PAKRATT program, see the program manual to place the PK-232 into FEC AMTOR transmit.

If you are using a terminal or terminal program, the following will place your PK-232 and transceiver into the transmit mode.

- Type "FEC" then press the <Enter> key to key your transmitter and automatically enter AMTOR FEC transmit mode.

As soon as you type the <Enter> key you will be transmitting! At this point you are also in the CONVERSE mode and anything you type will be sent in FEC by your transmitter.

- Type in your CQ message. Make sure you include YOUR Callsign, your four-character Selcall (MYSELCAL) as well as your seven-character Selcall (MYIDENT) so others can respond to your CQ call.

  An example is shown below:

  ```
  CQ CQ CQ CQ CQ CQ CQ DE N7ML (NNML) (VTMFFFF)
  CQ CQ CQ CQ CQ CQ CQ DE N7ML (NNML) (VTMFFFF)
  CQ CQ CQ CQ CQ CQ CQ DE N7ML (NNML) (VTMFFFF)
  CQ CQ CQ CQ CQ CQ CQ DE N7ML (NNML) (VTMFFFF)
  SELCALL NNML (VTMFFFF) K
  <CTRL-D>
  ```

- Type <CTRL-D> at the end of your CQ call. The <CTRL-D> puts both your radio and the PK-232 into the receive mode.

- Wait a bit to see if you get a response. If not, you can repeat the above procedure.

7.3.3 Answering an FEC AMTOR CQ

Normally when you see a station calling CQ in FEC AMTOR, you will want to answer him using ARQ AMTOR. Remember that ARQ AMTOR is the protocol that reduces the chance of transmission errors.

Let's assume you hear NNML calling CQ. To answer, do the following:

- If you are using an Timewave PAKRATT program, check the program manual for instructions on starting an ARQ AMTOR contact.

- If you are using a terminal simply type "ARQ NNML<Enter>" to start a CCIR 476 ARQ contact, or "ARQ VTMFFFF<Enter>" to start a CCIR 625 ARQ contact.

After your PK-232 has locked or synchronized with the distant station, you may begin your conversation.

N7ML N7ML DE YOURCAL YOURCAL...etc

7.3.4 ARQ AMTOR Operating Fundamentals

When you finish typing your comments or traffic to the other station and wish the distant station to transmit to you Do Not type "KKK" or anything like that!

- Do type a plus sign immediately followed by a question mark (+?).

"+?" is a software changeover command that switches your system from being the "Information Sending Station" (ISS) to the "Information Receiving Station" (IRS), and switches the distant system from being the IRS to being the ISS. When your distant partner sees the "+?" he knows he can begin typing comments or traffic.

NOTE: When discussing ARQ operation, we use the terms "Information Sending Station" and "Information Receiving Station" instead of "transmit" and "receive" since in ARQ AMTOR both stations are rapidly switching from transmit to receive.

- Don't bother with multiple call signs and "over-to-you" routines or "KKK" used in Baudot and ASCII RTTY operation. The system does it all for you when you type the "+?".

The FCC requires station identification once every ten minutes. It's sufficient to begin with "QRA (mycall)" or end your transmission with "QRA (mycall)" before the "+?" changeover code, or use the <CTRL-B> "HERE-IS" to send your own Auto-AnswerBack message.

7.3.5 Ending an ARQ AMTOR Contact

When you've finished your "final finals" to the distant station and both stations are ready to end the Mode A (ARQ) contact, you can end the contact and terminate the link in several different ways:

- Type <CTRL-C> to return to Command Mode, then type "R" to break the link.

  The "R" command breaks the ARQ link immediately and returns your system to AMTOR Standby. This can be used as an "Emergency Shutdown" if you need to take your transmitter off the air.

- Type <CTRL-F> to break the link and send your Morse ID.

  Your PK-232 switches to the Morse Mode, sends your call sign at the speed set by MSPEED, and then shuts off your transmitter.

o Type <CTRL-D> to stop sending when the transmit buffer is empty.

<CTRL-D> breaks the link and returns your PK-232 to Command Mode.

7.3.6 LED Status and Mode Indicators

All the LEDs on the front of the PK-232 are there to help give you the units status at a glance. This is especially true in AMTOR operation.

The following describe typical LED status indications you will see.

Type "ARQ (SELCALL of distant station)." The LEDs change to:

```
STATUS:   SEND lit, PHASE lit
MODE:     ARQ lit
```

These LEDs show that your transmitter is in the SEND condition, in the "phasing" part of an ARQ selective call. Your transmitter will key on and off sending the distant station's SELCALL. As soon as your PK-232 is synchronized with the distant station, the LEDs change to:

```
STATUS:   SEND lit, TFC and IDLE lit alternately by data flow
MODE:     ARQ lit
```

Verify the link by typing a few <Enter>s; watch the display. Your traffic will now begin to flow as you type characters. If EAS is set ON, your typed characters are displayed as they are acknowledged by the distant station. The IDLE and TFC LEDs change back and forth whenever your typing pauses.

If errors occur on the link and the distant station sends RQ (Request for Repeat), the LEDs show:

```
STATUS    SEND lit, ERROR and/or RQ lit
MODE      ARQ lit

ERROR lit:     Your PK-232 has detected errors in the signals
               received from the distant station
RQ lit:        Your PK-232 has received a "request for repeat"
               code from the distant station
```

If the link fails and you lose synchronization with the distant station your PK-232 automatically tries to re-establish synchronization with the distant station. The LEDs change to show:

```
STATUS:   SEND lit, PHASE lit, ERROR and RQ alternately lit
MODE:     ARQ lit
```

After typing FEC, your PK-232 displays system status on its LEDs:

```
STATUS:   SEND lit, IDLE lit, TFC lit only briefly
MODE:     FEC lit
```

As you send your traffic the TFC LED will light. Whenever you stop typing, the TFC LED is extinguished and the IDLE LED is lit.

```
STATUS:   SEND lit, TFC and IDLE lit alternately by data flow
MODE:     FEC lit
```

7.4 AMTOR Operating Tips

The following "Function Keys" and immediate commands are included for AMTOR operating convenience.

Immediate Commands from the Command Mode:

"ARQ <SELCALL>"	Starts Mode A selective call and forces Converse
"FEC"	Starts Mode B transmission and forces Converse
"SELFEC <SELCALL>"	Starts Selective Mode B transmission
"R"	Stops sending immediately, forces AMTOR Standby, clears the transmit buffer of all remaining data
"AM"	Stops transmission, forces AMTOR Standby, clears the transmit buffer of all remaining data
"AL"	Forces re-synchronization in ALIST (AMTOR Mode A Listen)
"L"	Forces LETTERS case
"N"	Forces FIGURES case

Function Keys embedded in transmitted text:

<CTRL-B>	Sends your AAB string as a HERE-IS message
<CTRL-D>	Stops sending when the transmit buffer is empty
<CTRL-E>	Sends a "Who Are You" request to the other station
<CTRL-F>	Sends call sign in Morse and shuts off transmitter
<CTRL-N>	Sends FIGURES character
<CTRL-O>	Sends LETTERS character
<CTRL-T>	Sends the TIME if the DAYTIME clock has been set

7.4.1 ARQ Break-In (ACHG Command)

In Mode A (ARQ), when you're the "Information Receiving Station," you can use the "ACHG" command to interrupt the distant station's comments.

As the "Information Receiving Station," you normally rely on the distant station to send the "+?" to "change-over" at the end of his comments. ACHG is a command that forces both systems to reverse the "Information Receiving" and "Information Sending" status of the link.

- Use the ACHG command only when really needed to interrupt the distant station.

7.4.2 Entering Your Auto-AnswerBack (AAB)

AMTOR allows you to request the identity of the station you are conversing with by sending your PK-232 the <CTRL-E> character. This causes the PK-232 to send a FIGS-D request to the other station.

For this reason, you should set your own Auto-AnswerBack (AAB) message to "DE YOUR-CALL YOUR-MYSELCAL YOUR-MYIDENT". If you turn ON your own WRU command, your PK-232 will automatically send the AAB message when another station requests your identity, and then stop sending.

7.4.3 Speed Change Not Permitted

In accordance with FCC Part 97.69 and international regulations, AMTOR is operated at 100 bauds. The PK-232 does not permit any other speed.

7.4.4 Echoing Transmitted Characters As Sent (EAS)

EAS has special significance in ARQ AMTOR. If EAS is on, you will see characters echoed to your screen only after your partner in the AMTOR link, has validated them. With EAS ON, the characters appear on your screen three at a time.

- If the data scrolls across your monitor at an even rate, you can assume that you have a good ARQ link.
- If the data hesitates or scrolls in "jerky" intermittent fashion, that's generally a sign that the radio link is not too good.
- If the characters stop appearing on your monitor, the link is failing or has failed.

7.4.5 Sending Only Complete Words (WORDOUT)

Some AMTOR users like to have their words sent out only when they are complete. This allows the word you are currently typing to be edited as long as you have not typed a <Space> character. Turning WORDOUT ON activates this feature. See the Command Summary for more information.

7.4.6 Operating on the Wrong Sideband

In AMTOR operation it is important to be operating on the correct sideband, otherwise other stations will not be able to copy you. If you find a station operating on the wrong sideband, you can reverse your receive sense with the RXREV command.

Similarly, if someone tells you that you are on the wrong sideband, you can correct your transmit signal sense with the TXREV command. See the Command summary for more information on these commands.

7.5 Monitoring ARQ AMTOR Contacts with ALIST

Use the "ALIST" command to monitor ARQ traffic flowing between two stations linked in an ARQ contact. Your PK-232 will try to synchronize with whichever of the two linked ARQ stations is the Information Sending Station at the moment.

Mode A Listen operation does not give you error detection or error correction; your PK-232 is not one of the two stations two stations locked to each other. If the other two stations are enjoying a good link, you'll probably get good copy from that link.

Your PK-232 will not print a block of data if that block contains the same information as the previous block. If the "ISS" (Information Sending Station) is repeating the same block, you won't print it twice, unless you receive an error. If the stations you're monitoring are sending error and RQ codes and repeating blocks of characters across their link, you may see some repeated character blocks. If they're having link problems, the data on your screen can look very strange indeed, although the two synchronized stations are getting error-free copy.

7.6 AMTOR MailDrop Operation

The PK-232 now allows AMTOR access to the Packet MailDrop described in Chapter 5 of this manual. Messages that originate in Packet can now be accessed remotely in AMTOR and messages that originate from a remote AMTOR station can be accessed by Packet users of your MailDrop.

Make sure that you understand MailDrop Operation in Chapter 5 and the basic AMTOR operation described earlier in this chapter before putting your AMTOR MailDrop on the air.

7.6.1 Special Operating Considerations

The AMTOR MailDrop has been designed with a "Watchdog" safety feature so that it may perform safely without constant attention. If a remote station is linked with your AMTOR MailDrop and no traffic is passed for 5 minutes, the link will drop and your transmitter shut off.

At this time however, unattended operation below 30 MHz is not legal for US amateurs unless they hold a Special Temporary Authorization (STA) from the FCC for this purpose. This restriction may someday change, but until then US amateurs must be sure to always have control of their HF transmitters when any automatic device such as the PK-232 MailDrop is in operation.

With this in mind, we have designed the AMTOR MailDrop so that it can be enabled or disabled at any time during an ARQ link simply by turning the command TMAIL (TOR MAIL) ON and OFF. This allows you the SYSOP to make your MailDrop available to any station you are linked with at a moment's notice. This could come in handy should you want to forward a message from an AMTOR station into the Packet network. See toe CODE 2 command for upper and lower case text in AMTOR.

7.6.2 Settings For AMTOR MailDrop Operation

Before a remote AMTOR user can access your MailDrop, be certain that MYCALL is set to your Amateur callsign and MYSELCAL is set to your 4-character AMTOR SelCall. To allow CCIR 625 AMTOR access to your MailDrop, then your 7-character MYIDENT must be entered as well. Once these commands have been entered, you must then enter the AMTOR mode.

7.6.3 Starting AMTOR MailDrop Operation

Remote access to your AMTOR MailDrop is controlled by the command TMAIL which is short for TOR MAIL. The TMAIL command controls remote access to the AMTOR MailDrop in the same way that the MAILDROP command controls remote Packet access.

Turn the TMAIL command ON (default OFF) to allow remote stations to access your MailDrop in ARQ AMTOR. Turn TMAIL OFF to have normal ARQ QSOs with other stations in the AMTOR mode.

7.6.4 Local Logon to the MailDrop

To locally access your MailDrop use the MDCHECK command as described in chapter 5 of the manual on MailDrop operation.

7.6.4.1 Remote Logon to your AMTOR MailDrop

The AMTOR maildrop user interface is slightly different from the packet interface due to the differences between the two modes.

When CODE is set to 0 and the ITA#2 alphabet is used in AMTOR, only UPPER case characters are sent. If you the SYSOP set CODE to 2 enabling the Cyrillic extensions, both upper and lower case characters can be sent and received. See the CODE command for information and limitations of this feature.

When a station links with your AMTOR MailDrop, your PK-232 first identifies your station by sending your callsign and the amount of free MailDrop memory as shown below:

```
DE WX7AAA (AEA PK-232M) 17528 FREE.
```

The PK-232 then sends the user the MTEXT string if the MailDrop message command (MMSG) is ON. The default text is shown below:

```
WELCOME TO MY AEA PK-232M MAILDROP.
TYPE H FOR HELP.
```

Since AMTOR transmissions do not self-identify, your MailDrop will force the remote user to identify in one of three possible ways.

The first way is automatic:
Your MailDrop will send "STAND BY" and then the WRU request to the remote user. Always be sure you have entered a proper Auto-Answerback (AAB) message consisting of "QRA YOURCALL YOUR_MYSELCAL YOUR_MYIDENT" as described earlier in this chapter.

The second way covers beginning AMTOR users:
AMTOR users who have not entered a proper Auto-AnswerBack response or for some reason have the WRU feature disabled cannot be automatically identified by your MailDrop. In this case, your MailDrop will ask the calling station to identify as follows:

After 10 seconds your MailDrop will ask the calling station to identify by sending "QRZ? DE "your callsign+?" to the calling station.

The calling station then has 3 minutes to respond with its callsign. The ID must contain either "QRA" or "DE" and must end with "+?". An Amateur with the call WX7BBB would send the following:

```
QRA WX7BBB +?
```

If no satisfactory ID occurs within 3 minutes from the establishment of the link, the link is automatically shut down.

The third way covers experienced users:
Experienced AMTOR users may want to save time by simply sending QRA followed by their callsign immediately after establishing the link. For example station WX7BBB may simply enter the following immediately after establishing the ARQ link.

```
QRA WX7BBB +?
```

7.6.5 Caller Prompts

The command prompt that the MailDrop sends the remote user in AMTOR is shortened from that used in the Packet mode and is shown below:

WX7BBB DE WX7AAA GA+?

TMPROMPT is the AMTOR MailDrop message prompt sent to a remote station by your MailDrop. The default prompt is:

GA subj/GA msg, '/EX' to end.

Text before the first slash is sent to the user as the subject prompt; text after the slash is sent as the message text prompt.

7.6.6 Monitor MailDrop Operation

The local user (SYSOP) can monitor the dialog by setting MDMON ON. The PK-232 stays in command mode during remote access of the maildrop.

7.6.7 SYSOP MailDrop Commands

The MailDrop commands that you the SYSOP have access to are the same as those described in Chapter 5 of the manual on MailDrop Operation.

7.6.8 Remote User MailDrop Commands

When a remote user has logged onto your MailDrop the following commands are available to the distant station:

A, B, H, J, K, L, R, S, V, ?.

The remote user may end a command with either +? or a carriage return.

A brief description of each command follows in the next sections. The description is expanded where the command operation differs from the Packet Maildrop section found in Chapter 5.

7.6.8.1 A (ABORT) (Remote only)

The "A" command aborts the listing or reading of messages by the remote calling station as described in chapter 5. The difference in AMTOR is that the remote user must send the ACHG command first to reverse the direction of the link before he can issue the Abort command. The remote user also has the ability to abort a command that may have been mis-typed by typing "///" on the same line as the bad command.

7.6.8.2 B (BYE)

The "B" command logs the remote station off the MailDrop. In AMTOR the remote station may simply gracefully shut down the link with the RECEIVE character (<CTRL-D>) or the CWID character (<CTRL-F>).

7.6.8.3 H (HELP)

The "H" command sends the remote station a help list of the available commands shown in Chapter 5.

7.6.8.4 J (JLOG) (Remote only command)

The "J" command sent by the distant station will cause the MailDrop to send the list of stations who have logged in to your AMTOR MailDrop.

7.6.8.5 K n (KILL n [Mine])

The "K n" command deletes message number "n" from the MailDrop as described in Chapter 5.

7.6.8.6 L (LIST [Mine])

The "L" command shows the remote user only a list of the messages he or she may read as described in Chapter 5.

7.6.8.7 R n (READ n [Mine])

The "R n" command lets the remote user read any of the message numbers displayed in the LIST command. The command operates as described in Chapter 5 except that the column headers are not displayed.

7.6.8.8 S callsign (SEND callsign)

Due to the nature of AMTOR, character errors may occur at any time, so extra safeguards are built into the system. In AMTOR, the MailDrop echoes the actual SEND command, then asks for confirmation by sending "CFM YES/NO+?". If the remote user's reply is "N", the MailDrop cancels the SEND command and gives the "GA" command prompt instead. If the reply is "Y", the message can then be sent as shown below.

In the SEND command, the words "AT," "FROM" and "BID" must be used in place of the "@," "<" and "$" signs used in packet. Hierarchical addresses are also supported in AMTOR mode, but not forwarding. You the SYSOP may edit any message so it can be forwarded in Packet mode.

Since <CTRL-Z> is not available in the AMTOR character set, the "/EX" command must be used to end all AMTOR MailDrop messages. After the "/EX" has been detected, the MailDrop will confirm that the message has been sent by returning the message "FILED MSG n" to the remote user. An example of sending a message is shown below:

```
WX7BBB DE WX7AAA GA+?                          {MailDrop prompt}
s wx2zzz at wx2yyy                             {User's SEND command}

S WX2ZZZ AT WX2YYY                       {MailDrop echoes SEND command
18340 FREE.  CFM YES/NO +?                and awaits confirmation}
y                                        {User confirms}

GA SUBJ+?                                    {MailDrop Subject prompt}
Going to the Hamfest?                        {User enters Subject}
GA MSG, '/EX' TO END.+?                      {MailDrop Send prompt}
I haven't heard from you and wondered if               {Message text}
you are going to the Hamfest next month?               {Message text}
Hope to see you there. 73                              {Message text}
/ex                                          {User ends message}

WX7BBB DE WX7AAA FILED MSG 1 GA+?                {MailDrop prompt}
```

7.7 AMTOR Switching-Time Considerations

For operation in AMTOR Mode A (ARQ), your transceiver or transmitter-receiver combination must be able to change between transmit and receive within 20 milliseconds. Most semiconductor-based radios can easily meet this specification. Many older tube-type radios that use electromechanical relays operate very well in AMTOR Mode A (ARQ).

If the changeover from transmit to receive is too long, the minimum working distance is extended; the signal to the distant station will arrive before the station has switched back to receive. However, if the transmitting station is further away, the transmission time over the propagation path will delay the arrival of the signal until after the station has switched to receive. For this reason, you may be able to "Link with" stations across the country, but not across town.

If the receiving station's changeover from transmit to receive is too slow, the transmitting station delay between "PTT" and "data send" can be extended. See the ADELAY command in the Command Summary to adjust the PK-232's AMTOR timing characteristics to compensate for this.

7.7.1 Suggested AMTOR Operating Settings

If you have trouble synchronizing with another AMTOR ARQ station, try some of the following operating tips before calling AEA or deciding that your radio equipment needs modifications:

- Try to work the distant station on Mode B (FEC) to establish that the other station's system is fully functional.
- Don't use VOX control - use the PTT line from your interface.
- Turn off the AGC circuit - use the RF gain control to prevent receiver blocking on stronger signals.
- Turn off all compression or other audio processing.
- Keep the AFSK audio input level to the microphone circuit as low as possible - avoid overdriving the audio input stages.
- Disable the ALC circuit or reduce excessive ALC action; use more effective RF antenna loading to adjust output power levels.

7.7.2 Possible Areas for AMTOR Performance Improvement

If switching-time problems persist, you may have to make changes in the radio to eliminate excessive time delays:

- Remove large decoupling capacitors from the Push-To-Talk line to allow faster PTT (transmitter) activation;
- Improve power supply decoupling, especially in audio stages.
- Do not use squelch.

In case you can't solve your radio's switching-time problems, please call AEA Customer Service Department (see the front of this manual).

7.8 NAVTEX Operation

NAVTEX is an international system which stands for NAVIGATIONAL TELEX.

It is a direct printing service designed to distribute navigational and meteorological warnings and other urgent information to ships. To enter the NAVTEX mode, simply type "NAVTEX" at the command prompt.

The ARRL has also adopted this format for transmitting bulletins. In amateur radio this same format is starting to be referred to as AMTEX.

AMTEX transmissions can be found on ARRL bulletin frequencies.

NAVTEX is broadcast in Mode-B AMTOR (SITOR) on a frequency of 518 KHz.

NAVTEX may be selectively monitored, so you will see only information of interest and never see the same message twice. It is this unique feature of NAVTEX that the PK-232 uses with the NAVSTN and NAVMSG commands to allow the user to monitor only messages of importance.

NAVTEX/AMTEX messages are prefaced by the characters "ZCZC" and then a four character Preamble as diagrammed below.

```
ZCZC AA99
     3333
     333@DSerial Number 2nd DigitDD?
     33@DDSerial Number 1st DigitDDY
     3@DDDMessage Classification (A to Z)
     @DDDDNAVTEX Station Identification (A to Z)
```

The first character of the Preamble is a letter that identifies the NAVTEX transmitter. Transmitter Identification letters can be any of the characters A through Z. This limits the number of NAVTEX stations in an area to 26. The NAVSTN Command can be used to selectively monitor or reject certain NAVTEX transmitters.

The second character of the Preamble is the Message Classification. The NAVMSG command is used to selectively monitor or reject any of the NAVTEX message classes shown below:

A. Navigational Warnings
B. Meteorological Warnings (Storm Warnings)
C. Ice Reports
D. Search and Rescue Information
E. Weather Forecasts
F. Pilot Service Messages
G. DECCA System Information
H. LORAN-C System Information
I. Omega Systems Messages
J. SATNAV System Messages
K-Z. Reserved for future use

The exception to this is that message classes A, B and D CANNOT be excluded and will always be copied if the transmitting station is enabled by NAVSTN.

The last two numbers form a serial number from 00 through 99 that is different for each message. The PK-232 remembers the Preamble of the 200 most recent messages and will not re-print a message that has the same preamble if it has already been received without many errors.

CHAPTER 8

MORSE OPERATION

8.1 Overview

The PK-232 will both send and receive International Morse Code. The computer based Morse operator can use the PK-232 to send "perfect" code at much higher speeds than are typical of hand sent code. When a computer is used to send and receive Morse Code, you can also maintain record of your contacts.

As a rule, no computer can receive morse as well as the FSK modes. Your PK-232 is no exception. A strong signal and a "good" fist are both required for the PK-232 to do a reasonable job of copying code. Don't expect your PK-232 to do miracles and produce good copy from bad fists!

8.2 Where to Operate Morse

Before you can operate Morse, you must first know where the activity is. Morse operation is permitted on any amateur frequency, but most often occurs in the lower 100 to 250 KHz of a band.

8.2.1 PK-232 Morse Parameter Settings

If you are using an AEA PAKRATT program, follow the instructions in the program manual to enter the Morse mode.

If you are using a terminal, simply type "MORSE" or "MO" from the Command Mode followed by the <Enter> key to enter the Morse mode. The PK-232 responds by displaying the previous mode:

```
Opmode   was PAcket
Opmode   now MOrse
```

8.2.2 HF Receiver Settings

Set your HF receiver (or transceiver) to the CW mode. Adjust the volume to a comfortable listening level. Be certain that any IF-Shift and Passband Tuning controls are centered or set to the OFF position.

8.2.3 Tuning in Morse Stations

Tuning in Morse stations properly is critical to successful operation.

Follow the procedure below for the best results in tuning in Morse stations.

- Make certain your HF receiver is in the CW mode.
- Turn any IF-Shift and Passband-Tuning controls to the Center or OFF position.
- Tune your receiver carefully in the lower portion of your favorite amateur band and look for Morse signals.

- When you find a station, slowly vary VFO on your receiver and look for a display on the PK-232 tuning indicator as shown below when the station is "keyed down".

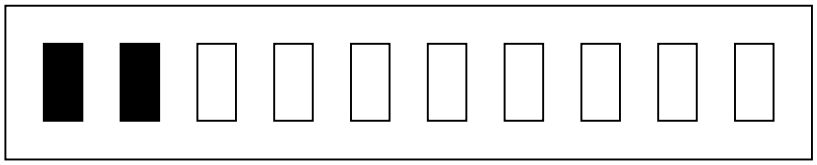

Tuned In
(KeyDown)

When the station is not "keyed down" or there is no station on frequency, the tuning indicator should look like the one below.

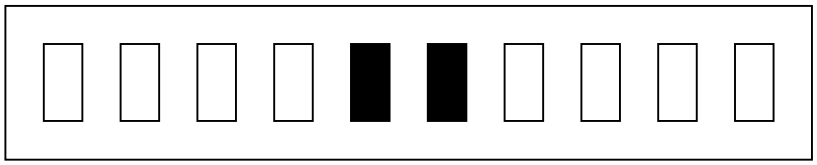

Frequency
Quiet

- Adjust the PK-232's THRESHOLD control so that the DCD LED lights when a properly tuned Morse station is being received.

When you have a Morse station tuned in, you should see the copy on your screen. The PK-232 will track the speed of the received signal.

8.3 Going On The Air

Make sure your PK-232 is adjusted for Morse operation as described in your transmitter's manual. Make sure your antenna is tuned and adjusted for the band and operating frequency you are using.

If you are using a terminal or terminal program, the following will place your PK-232 and transceiver into the transmit mode.

- Type "X" for XMIT and then press the <Enter> key to key your transmitter and automatically enter the Converse mode.

As soon as you type the <Enter> key you will be transmitting!
At this point you are also in the CONVERSE mode and anything you type will be sent in Morse by your transmitter.

When you are finished transmitting, use one of the following methods to return to receive.

- Type <CTRL-D> to shut off your transmitter and return to the Command Mode.

- Type <CTRL-C> to return to the Command Mode and then type "R" to shut down your transmitter and end the contact.

See the following sections for some Morse operating hints.

8.3.1 A Typical Morse Contact

As with most amateur operating modes, you can start a contact either by "calling CQ" or by answering a "CQ" call by another station.

To call CQ first you must tell your PK-232 to start transmitting.

- Type "X" to key your transmitter and start the PK-232 sending.

- Type in your CQ message (use YOUR callsign) such as the one below:

  CQ CQ CQ CQ CQ CQ DE YOURCAL YOURCAL YOURCAL
  CQ CQ CQ CQ CQ CQ DE YOURCAL YOURCAL YOURCAL
  CQ CQ CQ CQ CQ CQ DE YOURCAL YOURCAL YOURCAL K
  <CTRL-D>

- Type <CTRL-D> at the end of your CQ call. The <CTRL-D> puts both your radio and the PK-232 into the receive mode.

- Wait a bit to see if you get a response. If not, you can repeat the above procedure.

8.4 Morse Operating Tips

The following "Function Keys" and immediate commands are included for Morse operating convenience.

Immediate Commands from the Command Mode:

"L"	Locks system to the speed of the incoming signal.
"R"	Switches system to receive mode, unlocks receive speed, forces receive speed to equal transmit speed
"X"	Switches system to transmit mode and forces immediate entry into Converse mode.
"K"	Loads the Transmit type ahead buffer
"MO"	Unlocks the Morse receive speed.

Function Key characters embedded in transmitted text:

<CTRL-D>	Shuts off transmitter and returns PK-232 to the Command Mode after sending the contents of the transmit buffer.
<CTRL-T>	Sends the TIME if the DAYTIME clock has been set.

8.4.1 Speed Change (MSPEED)

Use the MSPEED command to change Morse keying speed.

Type "MSPEED" followed by one or two digits from "5" to "99" and a <Enter>. The PK-232 responds with the previous Morse speed.

```
MSPeed   was 20
MSPeed   now xx (whatever new speed digits you typed)
```

The number you enter becomes the new transmit speed and replaces the value used previously. The slowest Morse speed is 5 words per minute.

8.4.2 Echoing Transmitted Characters As Sent (EAS)

Since Morse can be rather slow, some users like to know just when the characters they are actually being sent. The EAS command when turned ON will Echo characters to the display only when they are sent over the air.

8.4.3 Sending Only Complete Words (WORDOUT)

Some Morse users like to have their words sent out only when they are complete. This allows the word you are currently typing to be edited as long as you have not typed a <Space> character. Turning WORDOUT ON activates this feature. See the Command Summary for more information.

8.4.4 Speed Lock (LOCK)

The LOCK command locks the system to the speed of the received signal. This can help the reception of Morse code in the presence of noise.

To unlock the Morse speed and allow the PK-232 to track the received signal, type "R" or "MO" followed by an <Enter>.

8.5 Special Morse Characters

The PK-232's Morse program contains special keystrokes which you can use to make transmission easier, faster and more enjoyable. The most frequently used Morse "prosigns" are coded into the keyboard with keys that have no direct representation in standard Morse. These special "reserved" keys are listed below:

Morse	Keystroke	Abbreviation	Meaning
...-.-	* or <	SK	End of QSO
.-...	&	AS	Wait
.-.-.	+	AR	End of message
-.--.	(	KN	Go only
-...-	=	BT	Break or pause
-.-.-	> or %	KA	Attention
...-.	!	SN	Understand
.-.-	[	AA	New line
---.	\		Umlaut O
..--	^		Umlaut U
.--.-	]		Swedish A
..-..	@		Swedish E

8.6 Morse Code Practice

Use your computer with your PK-232 to develop and improve your manual CW sending and receiving skills.

Set your PK-232 for Morse receive operation and operate the hand key attached to your radio.

In most installations your hand keying will be sent to the PK-232 and displayed on your monitor if your radio has an audio "input monitor" or "sidetone" output and you've turned on those monitor functions.

Send test words for a few minutes to familiarize yourself with the relationship between your hand-keying and the Morse appearing on your screen.

Practice keying at various speeds; observe how the system decodes your "fist". You may be a bit unhappy or surprised at the quality of your keying but after a few sessions you'll notice an improvement.

CHAPTER 9

FACSIMILE OPERATION

9.1 Overview

Weather Facsimile (WEFAX) is transmitted throughout the Short-Wave radio spectrum, primarily to provide information to ships at sea. Typical stations you may find broadcast weather maps showing current as well as predicted weather conditions and satellite photographs showing the cloud cover over a large area.

Not only weather information is transmitted, but also news photographs from the wire services (see the frequency list below). Many of the photographs you see in your local newspaper every night are distributed via facsimile and some can be copied on your printer. Although a dot matrix printer does not have the resolution of an expensive facsimile receiver, it can display reasonable definition. The AEA PAKRATT WITH FAX programs allow WEFAX to be displayed on the screen of your computer. Many people prefer this to printing.

9.2 Finding FAX Frequencies

The following is a list of frequencies that seem to broadcast on a regular schedule. A few of these stations transmit 24-hours/day. We suggest you try the weather FAX frequencies listed below while you are becoming familiar with the commands. After you print a few pages, and have become accustomed to the sound of facsimile you will be able to tune the bands in search of other frequencies where perhaps different kinds of pictures may be found.

Weather: USB	3,357.0 KHz	4,268.0 KHz	4,975.0 KHz	6,946.0 KHz	
	10,865.0 KHz	12,125.0 KHz	20,015.0 KHz		
Photographs: LSB		10,680.7 KHz	17,673.9 KHz	18,434.9 KHz	

The following frequencies were obtained from Popular Communications Magazine:

USB

4,271.0 KHz	9,890.0 KHz	13,510.0 KHz		Halifax, Canada
8,502.0 KHz	12,750.0 KHz			Boston, Mass
9,389.5 KHz	11,035.0 KHz			Brentwood, NY
4,793.5 KHz	10,185.0 KHz	12,201.0 KHz	14,671.5 KHz	Washington, DC
9,157.5 KHz	17,447.5 KHz			Mobile, Al
8,080.0 KHz	10,854.0 KHz	16,410.0 KHz		Norfolk, VA
4,802.5 KHz	9,440.0 KHz	13,862.5 KHz		Hawaii
7,770.0 KHz	11,090.0 KHz	13,627.5 KHz		Hawaii
8,459.0 KHz				Alaska
4,346.0 KHz	8,682.0 KHz	12,730.0 KHz	17,151.2 KHz	San Francisco
8,646.0 KHz	17,410.5 KHz			San Diego

Table 1: Facsimile Frequencies

9.3 System Setup

If you own CSS HF Wefax program, you have the ability to display weather FAX on the screen of your personal computer. **DO NOT USE AN AEA "Y" CABLE WITH THE PK-232/DSP or PK/232PSK!** This manual refers most often to printing FAX on your printer, but the ideas and commands are similar for using CSS HF Wefax program.

To hook-up the PK-232 for facsimile operation the radio must be connected to either radio port 1 or 2. If all you want is to receive FAX, you only need to connect the audio from your receiver. If you wish to transmit as well, follow the instructions in Chapter 3 of this manual for Radio Connections.

If you are using a CSS HF Wefax program, follow the instructions in the program manual to run the program with the PK-232.

9.3.1 HF Receiver Settings

Set your HF receiver (or transceiver) to Upper Sideband (USB) unless you have connected your PK-232 through the direct FSK keying lines. In this case, you should select the FSK operating mode. Adjust the volume to a comfortable listening level.

9.3.2 Tuning In HF Facsimile Stations

Facsimile is most often found on Upper Sideband and sounds similar to monitoring an AMTOR QSO with both stations being of equal strength. The most common facsimile signals are WEFAX, so we have set the PK-232 FAX default parameters to copy weather charts and many satellite photographs. We recommend starting start with one of the listed weather frequencies, or frequencies from Popular Communications in Table 1 when first receiving facsimile.

Upon tuning into a WEFAX signal, you will notice that the facsimile sound seems to repeat at the rate of twice a second. This is the the horizontal scan frequency, and allows you to distinguish different facsimile services by speed. Common horizontal scan rates are 2 lines per Second, which is typically used in weather facsimile broadcasts, 1-line per Second for photographs, and 4-lines per second, for some foreign facsimile stations. Listen for these repetition rates as you tune across the bands in search of new pictures.

The PK-232 uses the 1,000 Hz wideshift filters which have a center frequency of 1.7 KHz for copying facsimile transmissions. As a result, you must tune 1.7 KHz lower than the frequencies listed in Table 1 when using Upper Sideband. Similarly; in Lower Sideband, one must tune 1.7 KHz higher than the frequencies listed in the table.

The PK-232 LED bar-graph should be tuned so that the facsimile signal is roughly centered in the display as shown in the middle of Figure 1 below. If the audio frequency is too low, the bar-graph will look something like the left-most display. If the audio frequency is too high, it will look something like the right-most display. Facsimile tuning is not especially critical when copying WEFAX, but a properly tuned signal is needed when printing facsimile photographs.

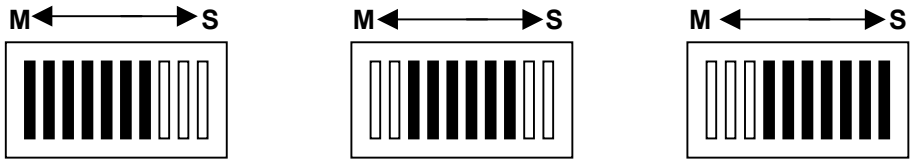

Frequency too low Tuned In Frequency too High

Figure 1: Facsimile tuning indicator conditions for FAX tuning

9.3.3 PK-232 Facsimile Parameter Settings

To start receiving WEFAX broadcasts on your computer screen, follow the setup instructions in your PAKRATT WITH FAX program manual.

To start receiving FAX on your graphics compatible printer, you first must tell the PK-232 that there is a parallel printer connected by issuing the command PRCON ON. The PK-232 will respond with:

```
PRCon  was  OFF
PRCon  now  ON
```

At this point you will observe that the STA, CON, STBY, and PKT LEDs are on. The MULT LED may also be on if the printer is "Off Line" or is not connected to the PK-232. This is normal whenever the printer command PRCON is ON and is nothing to worry about. Turning PRCON OFF will return the LEDs to their normal status indicating function.

Now all that is necessary is to put the PK-232 into FAX mode by typing FAX. The PK-232 will respond with:

```
Opmode  now  FAx
```

9.4 Receiving Facsimile Broadcasts

The PK-232 is now in the Facsimile Standby-Receive mode which means it is waiting for a synchronization signal from a facsimile transmitter to begin a new picture. Verify this by entering the OPMODE command. The PK-232 should respond with:

```
Opmode  FAX    STBY  RCVE
```

At this point make sure the THRESHOLD control is fully clockwise otherwise the printer may not print. If you do not want to wait for the beginning of a new picture, you may type

Lock

This forces a synchronization-lock, and starts the printer printing regardless of what kind of signal is being monitored. Since this synchronization lock was not sent by the transmitting station, the picture will probably not be correctly positioned on the page. Rather, it will likely appear to be split in half with the left half of the picture on the right half of the page, and the right half of the picture on the left half of the page.

To correct for this, a justification command has been included that allows the user to shift the entire image to the left in 1/2 inch increments. For example if the left-edge of the picture appears roughly 4-1/2 inches away from the left edge of the paper, issuing the command JUSTIFY 9 will shift the left edge of the picture to the left 4-1/2 inches (9 X 0.5 inch) correcting its justification.

The PK-232 will respond with:

JUstify now 9

This procedure will not be necessary if the PK-232 synchronizes from the transmitted facsimile signal.

This procedure is also not necessary if you are using an AEA PAKRATT with FAX program. AEA programs allow the image to be justified after

it has been received.

To stop the printer, you may either exit the facsimile mode by changing to another mode or enter the RCVE command, which puts the PK-232 back into facsimile standby receive. Standby receive is the same as if you have just entered the FAX mode from another mode. The

PK-232 will wait until it receives the synchronization signal from a facsimile station before beginning to print again.

9.5 Facsimile Operating Tips

The following section contains tips and information on FAX reception for those printing directly to a graphics printer. If you are using Timewave HF Wefax or AEA PAKRATT WITH FAX program, consult the program manual for more information and helpful hints.

9.5.1 Setting PRTYPE for Your Printer

Before FAX can be printed on the printer you have connected, you must choose the correct printer type with the PRTYPE Command. Most printers these days support either the Epson or the IBM bit-image graphics formats. For this reason the PK-232 defaults to the Epson format. See the PRTYPE command in the Command Summary if your printer does not support the Epson graphics standard.

9.5.2 Printing Direction (LEFTRITE)

Weather FAX as well as most other facsimile prints from left to right, but occasionally you may find a station that is reversed. If you come across such a transmission , you may simply issue the command LEFTRITE OFF to correct this. The PK-232 will respond with:

```
LEftrite  now  OFF
```

9.5.3 Inverting Black and White (FAXNEG)

You may occasionally come across a station that appears to be inverted; that is printing black where you expect white, and leaving white where you expect black. In this case you may issue the command FAXNEG ON. The PK-232 will respond with:

```
FAXNeg  now ON
```

What was before printing black will now be white, and vice versa.

9.5.4 Printing Density (GRAPHICS)

How the graphics will look on your printer depends on the setting of the GRAPHICS command. There are 7 graphics commands providing horizontal dot densities from 480 dots to 1,920 dots horizontally across a page. The default setting is 960 which Epson compatible graphics printers can reproduce. See the GRAPHICS command description in the Command Summary for a complete description of this command.

9.6 Printing Other Services

Most of the weather services in the US use a facsimile scan speed of 2-lines per Second, which corresponds to an FSPEED of 2 (Default). Facsimile photographs often use 1-line per Second, which is an FSPEED of 1. Some foreign services use speeds of 4-lines per Second, which is an FSPEED of 4. Speeds of 1.5 and 3-lines per Second are also supported. See the command summary in for more information on FSPEED.

When different horizontal scan speeds are used, the number of lines per vertical inch can also vary. If nothing is done to change the number of lines printed by the printer, the pictures may appear squashed or elongated. The ASPECT command resolves this by allowing from one to six lines to be printed out for every six lines received. The default setting is ASPECT 2 which means that 2 out of 6, or 1 out of every 3 horizontal lines is printed. This is the most common setting you will use for WEFAX, but other services may require using other values to print pictures without aspect ratio distortions.

9.7 Transmitting FAX

The PK-232 does support FAX transmission, but attempting to do this without a Timewave HF Wefax or n AEA's PC-PAKRATT II WITH FAX program is difficult. We recommend you consider this program if FAX transmission is desired.

9.8 Adjusting the PK-232 4.0 MHz Master Oscillator

If you ever observe the received FAX from a Commercial station does not print or display straight up and down the page, your 4.00 MHz oscillator inside the PK-232 has probably drifted off frequency. If you have a frequency counter with a high-impedance input, you may do the following:

Step 1: Open the PK-232 by removing the six screws that hold the gray top-chassis in place and separate it from the bottom chassis.

Step 2: Reconnect the PK-232 to your radio, computer, printer, and to +13 VDC, then turn it on, and allow it to warm-up for 30 minutes.

Step 3: With the help of Figure 2 below, locate the variable capacitor C53 in the left-rear quadrant of the PK-232 circuit board. It is located immediately to the right of Q1 and Q2.

Step 4: Place the probe of the frequency counter on pin-6 of the Z80 microprocessor which will provide a strong square-wave clock signal.

Step 5: Adjust C53 until the counter reads 4.00000 MHz +/- 10 Hz.

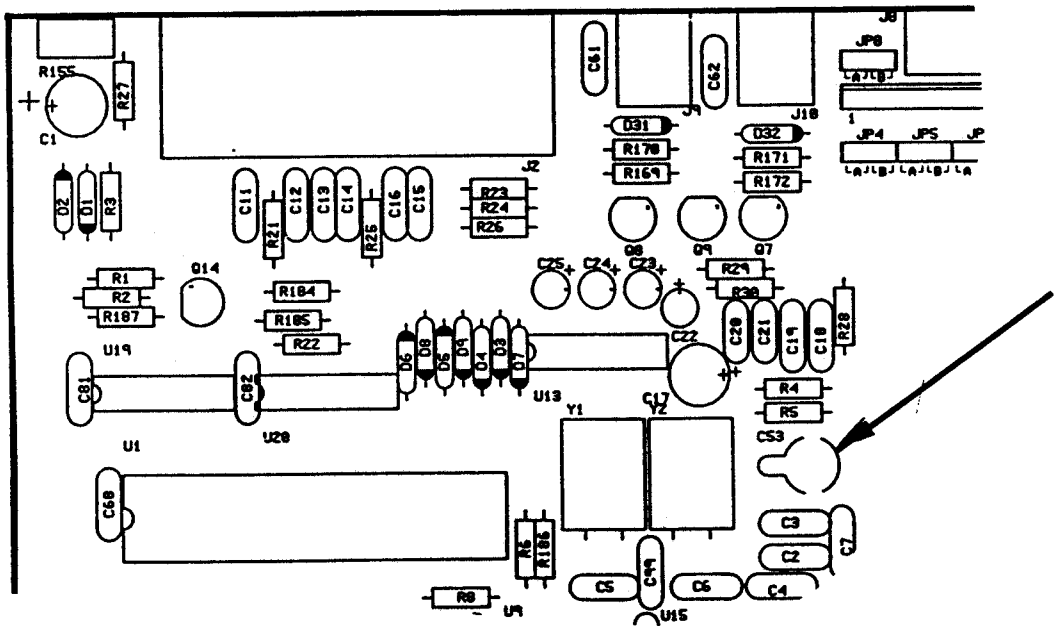

Figure 2: PK-232 circuit board layout showing the location of capacitor C53

CHAPTER 10

SIGNAL IDENTIFICATION AND TDM OPERATION

10.1 Overview

As you tune across the High-Frequency bands these days you find an ever increasing number of digital signals. These signals range from the simple Murray Baudot code, to ASCII and even packetized data. With the large number of speeds, formats and shifts now in use, it is difficult to say the least, to determine what kind of signal you are listening to. Even with a knowledge of digital communications, it is still time consuming to set the communication parameters correctly.

SIAM stands for SIgnal Identification and Acquisition Mode, and allows a wide variety of digital signals to be automatically analyzed so they can be easily copied with the PK-232. SIAM will "listen" to a signal for a few seconds and then display the type of signal and its speed to the user. The user can then decide whether or not to copy the signal, or simply go on to the next.

SIAM makes the PK-232 more useful to the radio amateur and the Short-Wave Listener alike. Whether tuning across 20 meters, or searching the Short-Wave bands, when you find a signal SIAM will help you decide what it is, and tune it in without time consuming trial and error.

10.2 SIAM Operation

When preparing to tune in a digital signal, the only decision the operator needs to make before entering the Signal analysis mode is whether the signal is narrow or wide shift.

The command WIDESHFT determines whether or not the filters in the PK-232 are set for copying signals with a frequency-shift of greater than 200 Hz (WIDESHFT ON) or a shift of 200 Hz or less (WIDESHFT OFF).

Inside the Amateur bands most signals will be using 170 or 200 Hz shift and so WIDESHFT should be OFF. Outside the Amateur bands most stations will be using a frequency shift of more than 200 Hz and so WIDESHFT should be set ON.

10.2.1 Tuning in FSK Narrow and Wide Stations

Tuning in the Frequency Shift Keying (FSK) signal properly is critical to successful SIAM operation. SIAM can only decode a signal properly if it is tuned correctly. Follow the tuning procedure below carefully for the best results in tuning HF FSK stations.

- Make certain your HF receiver is either in LSB or FSK depending on your PK-232 setup.
- Turn any IF-Shift and Passband-Tuning controls to the Center or OFF position.
- Tune your receiver carefully across the band looking for the distinctive two tone sound of an FSK signal.

- When you find a station, slowly vary VFO tuning knob on your receiver and look for a display on the PK-232 tuning indicator like the one shown below.

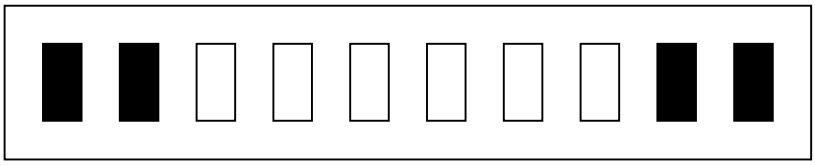

Tuned In

If the tuning indicator looks like the one below, the frequency from your speaker is too low for the PK-232 to copy the signal. Slowly tune the VFO and make the frequency higher.

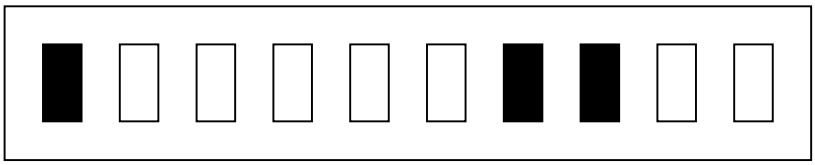

Frequency Too Low

If the tuning indicator looks like the one below, the frequency from your speaker is too high for the PK-232 to copy the signal. Slowly tune the VFO and make the frequency lower.

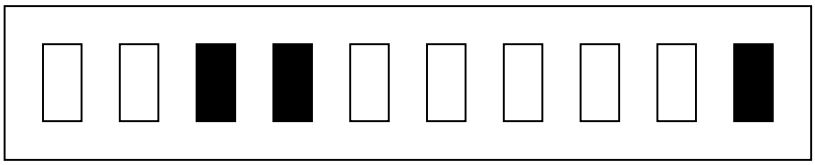

Frequency Too High

- Adjust the PK-232's THRESHOLD control so that the DCD LED lights when a properly tuned RTTY station is being received.

HINT: If you adjust the THRESHOLD control so the DCD LED goes out when no station is being received, you will prevent garbage characters generated by noise from printing on your screen.

10.3 Starting the SIAM Mode

After correctly tuning in a signal as described above, you are ready to enter the SIGNAL command. The PK-232 will respond with:

```
Opmode  was  XXXXX
Opmode  now  SIgnal
```

Make sure the THRESHOLD is adjusted so that the DCD LED is lit, then after about 10 seconds the PK-232 should respond with a baud rate indication and confidence factor similar to the one shown below.

```
0.47:    50  Baud,
```

After another 15 seconds or so, the PK-232 should respond with one of the following signal classes and tell whether or not the signal is reversed by giving the status of the command RXREV:

ASCII AMTOR ALIST Baudot Unknown noise 6-bit TDM

The complete information from the PK-232 signal analysis will look something like the following:

0.47 50 Baud, Baudot, RXREV OFF

This means that the PK-232 has determined the signal to be a 50-Baud Baudot signal that is not inverted (since RXREV is OFF). The 0.47 means that the PK-232 is only 47% sure that this analysis is correct.

SIAM can identify and copy ASCII, ARQ and FEC AMTOR, Baudot and TDM signals. To begin printing one of these signals, all that must be done is to type the command OK after the analysis has been completed. You should immediately begin to see text appear on your screen.

If the PK-232 determined the signal to be Unknown, 6-bit or noise which it cannot decode, typing OK will cause the response:

?bad

The SIGNAL routine will run repeatedly until the operating mode is changed either by typing OK, or forcing a change to another mode. If you tune to a different signal during an analysis, simply type SIGNAL again to restart the analysis routine.

10.3.1 Copying Encoded RTTY Transmissions

In the Short Wave bands many RTTY stations can be found that are not transmitting in plain text. Most of these stations are using sophisticated encryption techniques that make receiving them almost impossible. There are a few stations however that use a relatively simple bit-inversion technique to make them hard to copy. For these stations, the PK-232 has included the BITINV command.

If the text is not plain, but appears to be encoded, you can try different settings of the BITINV command. BITINV will Exclusive-OR a number from $00 to $1F with the received character of a Baudot signal thus inverting specific bits. By varying BITINV f rom 0 through 31, you will test all the different bit-inversion possibilities that may be used to encode a Baudot signal. If only simple bit-inversion is being used, one of the settings of BITINV should cause the transmission to print in plain text. If however, none of the 32 possibilities reveal plain text, then the transmitting station is likely using a more sophisticated encryption technique. Computer programmers may be interested in the 5BIT and 6BIT commands.

10.3.2 The CODE command for International RTTY Compatibility

The CODE command allows the PK-232 to receive (and sometimes send) other RTTY character sets. Look up the CODE command in the Command Summary Appendix for information on some of the other character sets you may encounter on the HF bands.

10.4 TDM Receive Operation

The aforementioned SIAM mode will recognize and decode TDM signals for receive only. The TDM receive mode can be entered directly simply by typing TDM at the PK-232 command prompt.

TDM is an immediate command that places the PK-232 in the TDM receive mode. TDM stands for Time Division Multiplexing, also known as Moore code and is the implementation of CCIR Recommendation 342. The following describes the TDM mode and commands in detail.

10.4.1 TD-M Parameters

If you are using an AEA PAKRATT program, follow the instructions in the program manual to enter the TDM mode.

If you are using a terminal, simply type "TDM" from the Command Mode followed by the <Enter> key to enter the TDM mode. The PK-232 responds by displaying the previous mode:

```
Oprnode    was PAcket
Oprnode    now TDm
```

10.4.2 Monitoring TDM Signals

The TDM command forces bit phasing; do this when changing frequency to another TDM signal. This is also useful when the PK-232 synchronizes on the wrong bit in the character stream, which is likely on a signal which is idling. TDM stations idle MOST of the time, so you may have to leave the PK-232 monitoring for an hour or two before any data is received.

TDM signals allow multiple data streams to share the same RF channel. The PK-232 can receive either 1, 2 or 4 channel TDM signals. When monitoring 2 or 4 channel TDM, the TDCHAN command allows you to select which channels will be displayed. The TDCHAN command takes an argument from 0 to 3 to allow any one of the four channels of a 4channel TDM station to be monitored.

TDM signals operate at different data rates. The TDBAUD command allows any data rate from 0 to 200 baud to be selected, but only the values in the following list are valid.

```
1-channel:   48, 72,  96
2-channel:   86, 96,  100
4-channel:  171, 192, 200
```

10.4.3 Where to Find TDM Sianals

We have heard TDM signals on the following frequencies which should be used as a starting point when looking for TDM signals.

```
9.125.9   LSB       11.246.5 USB      12.061.7 USB    14.623.3 USB
14.956.7 USB          18.983.6 USB    19.101.9 LSB    19.647.4 LSB
```

The above signals were using several different shifts. Remember to set WIDESHFT for the frequency shift of the signal you are tuning.

CHAPTER 11

Pactor OPERATION

11.1 Overview

Pactor is a relatively new Amateur data communications mode. It was developed in Germany by Hans-Peter Helfert, DL6MAA and Ulrich Strate, DF4KV. Pactor combines some of the best features of both AMTOR and packet as well as providing a few new features. Pactor operates at 100 bps or 200 bps depending on radio conditions. Pactor also contains a 16 bit CRC to provide near error-free operation as does packet and can also selectively use a data compression scheme (Huffman encoding) to increase the throughput when transmitting text. Pactor uses an 8 bit word, allowing the use of the full ASCII character set.

When data blocks are repeated in the case of an error, the receiving unit can often combine the information in the repeated blocks to provide a good block without the need of receiving a perfect block. This scheme is called memory ARQ.

Like AMTOR and packet, Pactor has two basic modes of operation, an ARQ mode (Automatic ReQuest for reception) and a non-linked mode used for CQ calls and roundtable operation.

- ARQ Pactor is a handshaking protocol that allows two stations to communicate in a near error-free fashion. When listening to an ARQ Pactor communication, you will hear a 0.96 second burst of data from the information sending station followed by a short burst from the data receiving station that is an acknowledge (ACK) or non-acknowledge (NAK). The NAK is sent by the receiving station when the CRC indicates an error in the data block. Like packet, Pactor is mark-space polarity independent. The Pactor protocol alternates the data polarity with every transmission.

- The unproto(col) mode of operation is a non-linked type of operation. It is used for roundtable operation or for calling CQ. The unproto mode repeats the data blocks a selectable number of times and can use either 100 or 200 bps. It also uses the CRC error check.

11.2 Where to Operate Pactor

Before you can operate Pactor, you must first know where the activity occurs. Most Pactor operation occurs on the 20-meter amateur band between 14.065 and 14.085 MHz. Pactor activity can be found on the other HF amateur bands as well and in most often located between 65 and 90 kHz up from the bottom of the band as it is on 20 meters. On 80 meters, most Pactor will be found between 3660 and 3690 kHz. Pactor is not sensitive to the sideband used, but we recommend using LSB as in RTTY and AMTOR operating modes.

11.3 PK-232 Pactor Parameter Settings

Pactor is a bit more complex than Baudot or ASCII operation. Pactor operation requires you to have MYPTCALL or MYCALL entered before you can operate. If you do not enter MYPTCALL, the call in MYCALL will be used as the default callsign. Pactor stations can't use the SubStation XDentification number (SSID) in MYCALL.

11.3.1 Entering Your Callsign (MYPTCALL)

If you have not already done so, enter your call after the commnand prompt (cmd:) using the MYPTCALL command. For example, if your call is WX5FAP, you would type:

```
cmd:MYPTCALL WXSFAP <Enter>
```

The PK-232 will respond with;

```
MYPTCALL  was  PK232
MYPTCALL  now  WX5FAP
```

If you do not enter a call using MYPTCALL, the PK-232 will use the call entered in MYCALL. MYCALL does not allow punctuation other than the dash (-). MYPTCALL does allow punctuation in the call. This allows you to properly identify when operating portable, e.g. MYPTCALL ZL2/KGRFK.

If a callsign has not been entered in either MYCALL or MYPTCALL, the PK-232 will not allow you to transmit in Pactor.

11.3.2 Enter the Pactor Mode

If you are using the Timewave PAKRATT for WINDOWS program, follow the instructions in the program manual to enter the Pactor mode.

If you are using a terminal or computer with a terminal emulation program, simply type "Pactor" or PT, from the Command Mode followed by the <Enter> key to enter the Pactor mode.
The PK-232 responds by displaying the previous mode, for example, from packet:

```
cmd:   PT <Enter>
```

The PK-232 will respond with:

```
Opmode    was PAcket
Opmode    now PACtor
```

Your PK-232's front panel STATUS display will show that you are in the Standby mode (both Standby LEDs lit), and the CMD (CoMmanD) LED will be lit. There is no front panel LED for the Pactor mode.

11.4 HF Receiver Settings

Set your HF receiver (or transceiver) to Lower Sideband (LSB) unless you connected your PK-232 through the direct FSK keying lines. If you are using a transceiver with a RTTY or Packet mode and you have the PK-232 connected for direct FSK, keep in mind that Pactor uses 200 Hz shift. If your radio has a 200 Hz shift FSK for packet use, you may use direct FSK. If your radio has only 170 Hz shift you should use the TX audio from your PK-232 to drive the microphone input of your radio. You may use either USB or LSB. By convention, LSB is generally used. Adjust the volume to a comfortable listening level.

11.5 Tuning in Pactor Stations

Tuning in Pactor stations properly is critical to successful operation. Since HF Pactor stations use 200 Hz Frequency Shift Keying (FSK) to send data, tuning accuracy is very important. Follow the procedure below for the best results.

- Make certain your HF receiver is either in LSB or FSK/RTTY/PACKET depending on your PK-232 set-up.

- Turn any IF-Shift and Passband-Tuning controls to the Center or OFF position.

- Enter the command "PTLIST" for Pactor Listen to monitor both linked and unproto Pactor data.

- Tune your receiver carefully between 14.065 and 14.085 MHz (or another band where you know there is Pactor activity) and listen for the one second data burst of ARQ Pactor or the steady data of the unproto mode stations. Be sure that the THRESHOLD CONTROL is turned far enough clockwise to activate the DCD LED during the data burst.

- When you find a station, slowly vary the VFO on your receiver and look for a display on the PK-232 tuning indicator as shown.

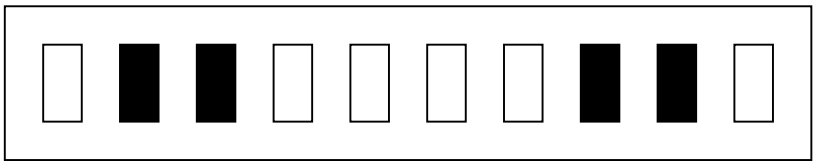

Tuned In

If the tuning indicator looks like the one below, the audio frequency from your speaker is too low for the PK-232 to copy packets. Slowly tune the VFO and make the frequency higher.

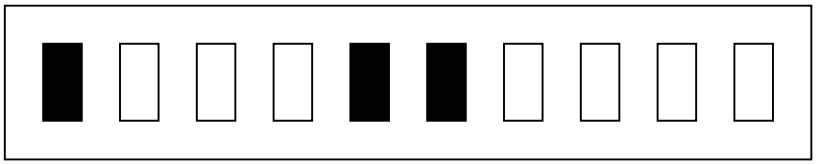

Frequency Too Low

If the tuning indicator looks like the one below, the audio frequency from your speaker is too high for the PK-232 to copy packets. Slowly tune the VFO and make the frequency lower.

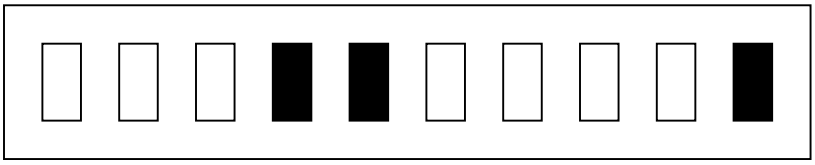

Frequency Too High

- Adjust the PK-232 front panel THRESHOLD control so that the DCD LED lights when a properly tuned Pactor station is being received.

After you have a Pactor station tuned in, you should start seeing the copy on your screen.

11.6 Operating on Pactor

Make sure your PK-232 is adjusted for your SSB transmitter as described in section 2.4.3 of this manual before transmitting. These are very critical adjustments. If your PK-232's APSK level and transmitter microphone gain are not adjusted properly, other stations will not be able to copy your signals. Check your plate or collector current or the power output of your rig before transmitting.

11.6.1 Going on The Air

Make sure your transmitter and antenna are tuned and adjusted for the band and operating frequency you are using. Before you transmit, you must decide if you are going to "call CQ" or answer someone's CQ call.

11.6.2 Calling CQ In Unproto Pactor

If you plan to make a CQ call, you must do so in the unproto Pactor mode.

This is required since an ARQ Pactor transmission requires another station to 'Link-up" with. If you are using a Timewave terminal program, see the program manual to place the PK-232 into unproto transmit. If you are using a terminal or terminal emulation program, the following will place your PK-232 and transceiver into the transmit mode.

- Type "PTSEND" then press the <Enter> key to key your transmitter and automatically enter Pactor unproto transmit mode.

  As soon as you type the <Enter> key you will be transmitting At this point you are also in the CONVERSE mode and anything you type will be sent in unproto Pactor by your transmitter.

- Type in your CQ message. Make sure you include YOUR Callsign. An example is shown below:

  CQ CQ CQ CQ CQ CQ CQ DE N7ML
  CQ CQ CQ CQ CQ CQ CQ DE N7ML
  CQ CQ CQ CQ CQ CQ CQ DE N7ML
  CQ CQ CQ CQ CQ CQ CQ DE N7ML K
  <CTRL-D>

- Type <CTRL-D> at the end of your CQ call. The <CTRL-D> puts your radio into the receive mods and your PK-232 into the Pactor standby mode where it is ready for a call.

Pactor standby is different from the Pactor Listen mode. In Pactor standby, your PK-232 is ready to receive Pactor connects, but you will not be able to monitor other Pactor stations.

- Wait a bit to see if you get a response. Your transmitter will begin to key on and off and you will see a CONNECTED message when someone calls you in Pactor. If you do not get a response, you can repeat the above procedure or you can go look for other Pactor stations as described in the next section.

11.6.3 Answering an Unproto Pactor CQ

You must be in the Pactor Listen (PTL) mode to monitor other Pactor stations. When you are in the Pactor Listen mode, you can monitor both the 1 second "chirps" of connected Pactor stations, and the continuous transmissions of unprotocol Pactor stations calling CQ.

Normally when you see a station calling CQ in unproto Pactor, you will want to answer him using ARQ Pactor. Remember that ARQ Pactor is the protocol that has the smallest chance of transmission errors.

Let's assume you hear N7ML calling CQ. To answer, do the following:

- If you are using the Timewave or AEA PAKRATT for WINDOWS program, check the program manual for instructions on starting an ARQ Pactor contact.

- If you are using a terminal or terminal emulation-program, simply type "PTC N7ML<Enter>" to start a Pactor contact. After your PK-232 has locked or synchronized with the distant station, which will be indicated by the LED display changing from PHASING to IDLE, you will see a CONNECTED message on your screen. You may then begin your conversation.

  N7ML DE YOURCALL ... etc

- When you finish typing your comments or traffic to the other station and wish the distant station to transmit to you will need to type "KKK" or "BTU" to let the other station know that you are going to change the link direction.

- Then, type a <CTRL-Z> (Hold the "CTRL" key down while typing the Z) to turn the link over to the other station.

<CTRL-Z> is the character defined by the PTOVER command that switches your system from being the Information Sending Station (ISS) to the Information Receiving Station (IRS) and switches the distant system from being the information receiving station to the information sending station. This single character operates like the "+?" does in AMTOR.

The FCC requires station identification once every ten minutes. It's sufficient to begin with "QRA (mycall)" or end your transmission with "QRA (mycall)" before the "<CTRL-Z>" changeover, or use the <CTRL-B> "HERE-IS" to send your own Auto-AnswerBack message. For the "HERE-IS" command to function, you must have your AAB text entered.
See appendix A for the AAB command.

11.6.3.1 Ending An ARO Pactor Contact

When you've finished your "final finals", to the distant station and both stations are ready to end the Pactor ARQ contact, you can end the contact and terminate the link in several different ways:

- Type <CTRL-D> to stop sending after the transmit buffer is empty. <CTRL-D> breaks the link and returns your PK-232 to Command Mode in Pactor Standby. This is the best way to end a Pactor contact.

- Type <CTRL-F> to stop sending after the transmit buffer is empty, send your Morse ID, and return to Pactor Standby and Command Mode.

- Transmitter and returns to Pactor Standby and Command Mode. This is the best way to end a contact if you want to identify your station in Morse code as well.

- Wait until all the text has been sent, then type <CTRL-C> to return to Command Mode, then type "R" to break the link. The PK-232 will then go into the Pactor Standby mode.

- Type <CTRL-C> to return to Command Mode, then type "R <Enter> R <Enter>" to break the link immediately If there are characters left in the transmit buffer, they will not be sent. This method should onlv be used for an emergency shutdown as it does not send the control signal to the other station that informs it you are shutting down. As a result the other station will continue to send until it's internal timer turns it off.

11.6.4 Long Path Contacts

If the station you are going to call is more than half way around the earth i.e. a long path contact, precede that station's callsign with an exclamation point. The will change the Pactor timing to allow for the extended radio propagation delay. You would type:

PTCONN !N7ML <Enter>

If your station doesn't link within a period of time determined by the ARQTMO command (default 60 seconds), your station will automatically stop transmitting.

11.6.5 LED Status and Mode Indicators

The front panel LED display provides mode and status information at a glance. This is especially useful in Pactor operation. The following describe typical STATUS indications you will see.

Type "PTCONN (CALLSIGN of distant station)". The STATUS changes to:

STATUS: SEND and PHASE
MODE: ARQ

This shows that your transmitter is in the SEND condition, in the "connect" part of an ARQ connect call. Your transmitter will key on and off, sending the distant station's connect request. As soon as your PK-232 is synchronized with the distant station, the STATUS changes to:

STATUS: TFC, SEND and CON
MODE: ARQ

Verify the link by typing <Enter> a few times watch the display. Your traffic will now begin to flow as you type characters. If EAS (Echo As Sent) is set ON, your typed characters are displayed as they are sent. The STATUS will change back and forth from IDLE and TFC whenever your typing pauses.

If errors occur on the link and the distant station sends REQUEST (request for Repeat), the STATUS will show:

STATUS: ERROR and/or RQ (ReQuest)
MODE: ARQ

ERROR: Your PK-232 has detected errors in the signals received from the distant station

REQUEST: Your PK-232 has received a "request for repeat" code from the distant station

If the link fails and you lose synchronization with the distant station the STATUS changes to show:

STATUS: SEND and PHASE
MODE: ARQ

After typing "PTSEND"', to start an unproto transmission, your PK-232 displays the system status:

STATUS: SEND and IDLE
MODE: FEC

As you send your traffic the STATUS will change back and forth from IDLE to TFC. Whenever you stop typing, the IDLE status is displayed.

11.7 Pactor Operating Tips

The following 'Special Function characters" and immediate commands are included for Pactor operating convenience.

Immediate Commands from the Command Mode:

'PT"	Selects the Pactor mode
"PACTO"	Selects the Pactor mode as above
"PTConn <CALL>"	Starts a linked connect and forces Converse
"PTSend"	Starts an unproto transmission and forces Converse
“R”	Stops sending immediately, forces Pactor Standby
"PTList"	Allows reception of both unproto and linked transmissions
'PTHUFF <ON/OFF>'	Off - prevents Huffman compression on - allows automatic use of compression
'PT200 <ON/OFF>-	Off - prevents 200 baud operation On - allows automatic speed selection
'PTOver<$HH>'	Used to select the change overcharacter. Defaults to <CTRL-Z> ($lA)

Special Function Characters embedded in transmitted text:

<CTRL-B>	Sends your AAB string as a HERE-IS message
<CTRL-D>	Stops sending when the transmit buffer is empty
<CTRL-E>	Sends a "Who Are You" request to the other station
<CTRL-F>	Same as CTRL-D but sends your callsign in Morse
<CTRL-T>	Sends the TIME if the DAYTIME clock has been set
<CTRL-Z>	Changes your PK-232 from send (ISS) to receive (IRS).

11.7.1 ARO Break-In (ACHG Command)

In the linked or connected mode, (ARQ), when you're the "Information Receiving Station," you can use the “ACHG" command to interrupt the distant station's comments.

As the "Information Receiving Station," you normally rely on the distant station to send the "<CTRL-Z>" to “change-over" at the end of his comments. ACHC is a command that forces both systems to reverse the "Information Receiving" and "Information Sending" status of the link.

- Use the ACHG command only when really needed to interrupt the distant station.

11.7.2 Entering Your Auto-AnswerBack (AABI

Timewave Pactor allows you to request the identity of the station you are conversing with by sending your PK-232 a <CTRL-E>. This causes the PX-232 to send an inquiry Who aRe YOU (WRU) request to the other station.

For this reason, you should set your own Auto-AnowerBack (AAE) message to "DE YOUR-CALL". Your PK-232 will automatically send the AAB message when another station requests your identity, and then stop sending.

11.7.3 Operating Pactor with Other Modem frequencies and Shifts

All Pactor operation uses 200 Hz shift PSK tones as does HF packet.

11.7.4 Automatic Speed Change

If the command PT200 is set on, the linked Pactor mode will automatically change the transmitted data rate from 100 bps to 200 bps if a certain number of error-free 100 bps packets are received in a row. If the error rate at 200 bps is excessive, the data rate will automatically revert to 100 bps. There may be some propagation conditions that will cause the system to vacillate between the two data rates. This may be prevented by setting PT200 to OFF, which will force 100 bps operation.

11.7.5 Echoing Transmitted Characters As Sent (EAS)

EAS (Echo As Sent) operates the same as in AltQ AMTOR. If EAS is ON, you will see characters echoed to your screen only the first time your PK-232 sends them. If the data is not acknowledged by the receiving station and is re-transmitted, the characters are not echoed again. With EAS OFF, characters are echoed to you screen as you type them. With EAS ON:

- If the data scrolls across your monitor at an even rate, you can assume that you have a good ARQ link.

- If the data hesitates or scrolls in "jerky" intermittent fashion, that's generally a sign that the radio link is not very good.

- If the characters stop appearing on your monitor, the link is failing or has failed. The STATUS display will tell you this by showing ERROR or REQUEST nearly continuously.

11.7.6 Sending only Complete Words (WORDOUT)

Some Pactor users like to have their words sent out only when they are complete. This allows the word you are currently typing to be edited as long as you have not typed a <Space> character or punctuation. Turning WORDOUT ON activates this feature. See the Command Summary for more information.

11.7.7 Operating on the Wrong Sideband

Pactor, like packet, is mark-space polarity independent although the reason for this is somewhat different. specific header blocks define the mark-space sense for each Pactor information block and during linked operation, the mark-space sense is alternated. For this reason, there Is no "wrong" sideband. You may operate on either LSB or USB. If you are going to change to other modes, for example AMTOR, then LSB must be used. It is suggested that LSB be used to make mods changes simple as well as keeping the radio dial frequency reading consistent with other users.

If you are using a radio that has direct PSK inputs, keep in mind that Pactor uses 200 Hz shift and most direct FSK capable radios are set for 170 Hz shift. If the 170 Hz shift can not be adjusted to 200 Hz, use the TX audio from the PK-232 to drive the microphone input when operating Pactor.

11.7.8 Little Used Pactor Commands

There are four seldom-used Pactor commands that are accessible with the UCmd command. This command is of the form UCmd n x, where "n" is the UCind number and x is the setting. See Appendix A for more information.

The Pactor UCMD commands are:

UCMD 0: Default 3, maximum 30. This command sets the number of correct packets in a row that must be received before generating an automatic request to change from 100 to 200 baud. Also see the command PT200 in 11.7.4.

UCMD 1: Default 6, maximum 30. This command sets the number of incorrect packets in a row that must be received before generating an automatic request to change from 200 to 100 baud. Also see the command PT200 in 11.7.4.

UCMD 2: Default 2, maximum 9. This command sets the number of packets sent in a baud rate speed-up attempt.

UCMD 3: Default 5, maximum 120. This command sets the maximum number of Memory ARQ packets that are combined to form one good packet. When this number is exceeded, all stored packets are erased and Memory ARQ is re-initialized.

11.8 Monitoring ARQ Pactor Contacts with PTLIST

Use the "PTLIST" command to monitor ARQ traffic flowing between two stations linked in a Pactor ARQ contact. Your PK-232 will try to synchronize with whichever of the two linked ARQ stations is the Information Sending Station at the moment.

Monitoring two linked Pactor ARQ stations does not provide the error correction enjoyed by the linked stations. Since your PK-232 is not part of the 'handshake" you do not generate the request for repeat. Your PK-232 will check for the correct CRC error check and will not display messages with errors. Missing blocks will be designated with four error symbols. The default error symbol is the underline (_). See the command summary for ERchar, the error symbol.

Your PK-232 will not print a block of data if that block contains the same sequence number as the previous block. If the "ISS" (Information Sending Station) is repeating the same block, you won't print it twice.

11.9 Pactor MailDrop Operation

The PK-232 allows Pactor as well as Packet access to the MailDrop. Messages that originate in Packet or AMTOR can be accessed remotely in Pactor and messages that originate from a remote Pactor station can be accessed by Packet and AMTOR users of your MailDrop. This section of the manual talks about basic Pactor mailbox operation. Section 11.10 will discuss how to pass message traffic from Pactor to Packet and AMTOR and vice versa.

Make sure that you understand MailDrop Operation in chapter 5 And the basic Pactor operation described earlier in this chapter before putting your Pactor MailDrop on the air.

11.9.1 Special Operating Considerations

The Pactor MailDrop has been designed with a "Watchdog" safety feature so that it may perform safely without constant attention. If a remote station is linked with your Pactor MailDrop and no traffic is passed for 5 minutes, the link will drop and your transmitter will shut off.

With this in mind, we have designed the Pactor MailDrop so that it can be disabled at any time during an ARQ link simply by turning the command TMAIL (TOR MAIL) OFF. This allows you the SYSOP to make your MailDrop available to other stations and still break in to chat with remote stations at any time. This could come in handy should you want to provide some help or information to a remote station using your Pactor MailDrop.

11-9.2 Settings for Pactor MailDrop Operation

Before a remote Pactor user can access your MailDrop, be certain that MYPTCALL and/or MYCALL is set to your Amateur callsign.

11.9.3 Starting Pactor MailDrop Operation

Remote access to your Pactor MailDrop is controlled by the command TMAIL which is short for TOR MAIL. The TMAIL command controls remote access to the Pactor and AMTOR MailDrop in the same way that the MAILDROP command controls remote Packet access.

Turn the TMAIL command ON (default OFF) to allow remote stations to access your MailDrop in ARQ Pactor. Turn TMAIL OFF to have normal ARQ QSOO with other stations in the Pactor mode.

11.9.4 Local Logon to the MailDrop

To locally access your MailDrop use the MDCHECK command as described in Chapter 5 of this manual on MailDrop operation.

11.9.4.1 Remote Logon to your Pactor MailDrop

The Pactor MailDrop user interface is slightly different from the packet interface due to the differences between the two modes.

When a station links with your Pactor MailDrop, your PK-232 first identifies your station by sending your callsign and the amount of free MailDrop memory as shown below:

```
Type H for help.
(AEA PK-232M) 18956 free.
```

The PK-232 then sends the user the MTEXT string if the MailDrop Message command (MMSG) is ON. The Default text is shown below:

```
Welcome to my AEA PK-232MBX MailDrop.
Type H for Help
```

11.9.5 Caller Prompts

The command prompt that the MailDrop sends the remote user in Pactor is similar to that used in the Packet mode and is shown below:

```
WX7BBB DE WX7AAA    (A,B,H,J,K,L,R,S,V,?) >
```

As in packet, MDPROMPT is the Pactor MailDrop message prompt sent to a remote station by your MailDrop. The default prompt is:

```
Subject:/Enter Message, IZ (CTRL-Z) or /EX to End
```

Text before the first slash is sent to the user as the subject prompt; text after the first slash is sent as the message text prompt.

11.9.6 Monitor MailDrop Operation

The local user (SYSOP) can monitor the dialog by setting MDMON ON. The PX-232 stays in command mode during remote MailDrop access.

11.9.7 SYSOP MailDrop Commands

The MailDrop commands that you the SYSOP have access to are the same as those described in chapter 5 of the manual on MailDrop Operation.

11.9.8 Remote User MailDrop Commands

When a remote user has logged onto your MailDrop the following commands are available to the distant station:

A, B, H, J, K, L, R, S, V, ?.

The remote user may end a command with either <CTRL-Z> or a carriage return.

A brief description of each command follows in the next sections. The description is expanded where the command operation differs from the Packet MailDrop section found in chapter 5.

11.9-8.1 A (ABORT) (Remote only)

The "A" command aborts the listing or reading of messages by the remote calling station as described in chapter 5. The difference in Pactor is that the remote user must send the ACHG command first to reverse the direction of the link before he can issue the Abort command.

The remote user also has the ability to abort a command that may have been mis-typed by typing '///, on the same line as the bad command.

11.9.8.2 B (BYE)

The "B" command logs the remote station off the MailDrop. In Pactor the remote station may gracefully shut down the link with the RECEIVE character (<CTRL-D>) or the CWID character (<CTRL-F>).

11.9.8.3 H (HELP)

The "H" command sends the remote station a help list of the available commands shown in chapter 5.

11.9.8.4 J (JLOGI (Remote only command)

The "J" command sent by the distant station will cause the MailDrop to send the list of stations who have logged in to your Pactor MailDrop.

11.9.8.5 K n (KILL n [mine])

The "K no command deletes message number On" from the MailDrop as described in chapter S. The "KM" command will kill all of your messages that have been read.

11.9.8.6 L (LIST[mine])

The "L" command shows the remote user only a list of the messages he or she may read as described in chapter 5. The "LM" command lists only those messages addressed to the user.

11.9.8.7 R n (READ n [mine])

The "R n" command lets the remote user read any of the message numbers displayed in the LIST command. The command operates as described in chapter 5 except that the column headers are not displayed.

11.9.8.8 S callsign (SEND callsignl

Either a <CTRL-Z> or the "/EX" command must be used to end all Pactor MailDrop messages. After the "/EX" or <CTRL-Z> has been detected, the MailDrop will confirm that the message has been sent by returning the message "FILED MSG n" to the remote user. An example of sending a message is shown below:

```
WX7BBB DE WX7AAA    (A,B,H,J,K,L,R,S,V,?) >          (MailDrop prompt)
a wx2zzz @ wx2yyy   <CTRL-Z>                     (user's SEND command)
Subject:                                     (MailDrop Subject prompt)
Going to the Hamfest? <CTRL-Z>                   (user enters Subject)
Enter Message, It (CTRL-Z) or /EX to End        (MailDrop Send prompt)
I haven't heard from you and wondered if                (Message text)
you are going to the Hamfest next month?                (Message text)
Hope to see you there. 73                               (message text)
/ex <Enter>                                       (User ends message)
WX7BBB DE WX7AAA Filed msg 1 (A,B,H . J,K,L,R,S,V,?) >(MailDrop prompt)
b <CTRL-Z>                                         (User disconnects)
```

11.9.8.9 V (VERSIONI.(Remote only command)

The "V" command causes the PK-232 to send the sign-on message and firmware date to the remote user only.

11.9.8.10 ? (HELP) (Remote only command)

The "?" command sends the distant station a HELP list of all available MailDrop commands shown above under the "H" command. Both the "?" and the "H" cause this same file to be sent to the remote user.

11.10 Pactor and Packet MailDrop Operation

Messages left in the MailDrop in Pactor, AMTOR or Packet may be accessed in any MailDrop mode. You, the SYSOP, will have to change modes (and possibly bands or radio ports) to allow users access to your messages from the other modes.

You may want to customize the Pactor MailDrop prompt (MDPROMPT) or compose a message to ALL that tells remote users about your system.

Finally, remember to turn TMAIL ON and enter the Pactor mode of the PK-232 to start the Pactor MailDrop.

11.11 Pactor Switching-Time Considerations

For operation in Pactor ARQ, your transceiver or transmitter-receiver combination must be able to change between transmit and receive within 130 milliseconds. Most modern solid state radios can easily meet this specification. Many older tube-type radios that use electromechanical relays also operate very well in Pactor ARQ.

If the changeover from transmit to receive is too long, the minimum working distance is extended; the signal to the distant station will arrive before the station has switched back to receive. However, if the transmitting station is further away, the transmission time over the propagation path will delay the arrival of the signal until after the station has switched to receive. For this reason, you may be able to 'Link with' stations across the country, but not across town.

If the receiving station's changeover from transmit to receive is too slow, the transmitting station delay between "PTT" and "data send" can be extended. See the ADELAY command in the Command Summary to adjust the PK-232'B Pactor timing characteristics to compensate for this.

11.11.1 Suggested Pactor operating Settings

If you have trouble synchronizing with another Pactor ARQ station, try some of the following operating tips before calling Timewave or deciding that your radio equipment needs modifications:

- Try to work the distant station on the unproto mode to establish that the other station's system is fully functional.

- Don't use VOX control - use the PTT line from your interface.

- Turn off the AGC circuit - use the RF gain control to prevent receiver blocking on stronger signals.

- Turn off all compression or other audio processing.

- Keep the AFSK audio input level to the microphone circuit as low as possible - avoid over-driving the audio input stages.

- Disable the ALC circuit or reduce excessive ALC action; use more effective RF antenna loading to adjust output power levels.

11.11.2 Possible Areas for Pactor Performance Improvement

If switching-time problems persist, you may have to make changes in the radio to eliminate excessive time delays:

- Remove large decoupling capacitors from the Push-To-Talk line to allow faster PTT(transmitter) activation;

- Improve power supply decoupling, especially in audio stages.

- Do not use the squelch control.

In case you can't solve your radio's switching-time problems, please call Timewave's Customer Service Department (see the front of this manual).

OPERATION

The rest of this page is blank

APPENDIX A
COMMAND SUMMARY

A.1 Introduction

Your PK-232 is controlled by Commands that you enter from the keyboard. Most of these commands have a standard (default) value that provides good performance. There are a few commands that you will need to change. This section is intended as a command and error message reference and is not meant to be read from start to finish.

A.1.1 Entering Commands

Timewave Software for the PK-232 such as PC-PAKRATT has menus and even on-line help for commands. If you are using a Timewave program, please consult the Program manual for instructions on entering commands. The instructions below assume you are using a terminal or terminal-emulating program on your personal computer.

Most Commands are short names for the instruction you want the PK-232 to perform. Commands are entered after the Command prompt "Cmd:".

- You may use either UPPER or lower case when entering commands.
- End the command with a carriage return <CR> or the <Enter> key.
- Correct any typing mistakes before typing the final <Enter>.

A.1.2 Command Responses

Whenever the PK-232 accepts a command it responds by displaying both the old and new values. For example, if you type "XFLOW OFF" - you'll see the display:

```
XFlow   was ON
XFlow   now OFF
```

This message tells you that the value has been changed successfully.

A.2 Command List

Commands are listed alphabetically in the following command descriptions. Each command entry contains several sections:

Command Name, Default Value, Mode(s) in which the command is used, HOST mode abbreviation (for HOST mode programmers), and Parameters

A.2.1 Command Names and Abbreviations

The command name at the beginning of the description is the full word you can type in order to have your PK-232 execute this command. The capital letters indicate the minimum abbreviation you can use instead of the full word. For example:

You can enter the command MYCALL by simply typing "MY". (Note: DO NOT type the "quotation marks") The abbreviation "M" is not sufficient, but "MY", "MYC", "MYCA", "MYCAL" or "MYCALL" are all acceptable.

A.2.2 Default Values

Almost all commands have initial or default values that are loaded when the PK-232 is first turned on. The PK-232 assumes these default values to be best suited for the "average" amateur station operation. There is no rule that says "you must keep the defaults". You can (and should) change the default values as required for your individual operating needs, type of equipment, or local customs.

A.2.3 Modes in which the command is used

Many commands work only in a specific operating mode such as packet. Others commands function in all modes. The second line of the command description tells the mode or modes in which the command functions.

A.2.4 HOST Mode Abbreviations

If you are a computer programmer and wish to write an application for the PK-232, you may want to consider using the HOST Mode. Information on HOST Mode is available in the PK-232 Technical Reference Manual.

A.3 Parameters and Arguments

If a command requires Parameters, the type of parameter is indicated after the command name as well as its default value. Three different types of parameters are used: Boolean, Numeric and Text or String.

A.3.1 Boolean Parameters

Boolean parameters use one value out of a choice of only two possible values, such as ON or OFF, YES or NO, or EVERY or AFTER. Boolean parameters can also be toggled with an argument of "TOGGLE" or "T." This is useful, for example, in the case of RXREV and TXREV.

A.3.2 Numeric Parameters

A parameter designated as "n" is a numeric value. Numeric values can be entered by typing them in familiar decimal numbers, or optionally, in hexadecimal numbers (base 16).

When using hexadecimal notation, you must type a $ in front of the number to tell the PK-232 that this is a "hex" number.
Here's a brief explanation of "hex" numbers:

- The "digits" of a hex number represent powers of 16 in the same manner as the powers of 10 represented by a decimal number.

- The numbers 10 through 15 are indicated by hexadecimal digits A through F. For example:

  $1B = (1 x 16) + (11 x 1) = 27 (decimal)
  $120 = (1 x 16 x 16) + (2 x 16) + (0 x 1) = 288 (decimal)

For numeric parameters the arguments "ON" or "Y" set the parameter value to its default. Arguments "OFF" or "N" set the value to 0. Baud-rate parameters can use arguments UP (U) or DOWN (D) to select the next higher or lower baud rate.

A.3.3 Text or String Parameters

A text parameter such as the CTEXT message (your Connect-TEXT message) can hold most any ASCII character including UPPER and lower case letters, numbers, spaces, and punctuation.

Some commands such as CONNECT require call signs as parameters. These parameters are usually call signs, but may be any string of numbers and at least one letter up to six characters in length. Some commands such as CFROM (your "Connect FROM" list) have parameters which are actually lists of call signs. You must separate multiple call signs with either spaces or commas.

A.3.4 Using Commands Without Arguments

All commands that accept values or parameters may be typed without any arguments to check their status.
Typing the only the command name "VHF" with no arguments displays:

```
cmd:VHF          -    Command with no arguments
Vhf ON           -    displays the present value
```

NOTE: The DISPLAY command shows you groups of related parameters.

A.4 Controller Messages

From time to time, the PK-232 will generate messages informing you of its status. Error messages will also be generated if the PK-232 did not understand a command you have entered. This section describes the PK-232's messages and the circumstances which cause them to appear.

A.4.1 General Status Messages

Sign-On Message

```
AEA PK-232M Data Controller
Copyright (C) 1986 - 1990 by
Advanced Electronic Applications, Inc.
Release DD-MMM-YY
cmd:
```

The sign-on message appears when you turn on your PK-232, after system "RESTART" or "RESET" after the autobaud routine. The release date is updated whenever the firmware is changed. Please write the date on the first page of this manual in case it is needed.

```
PK232 is using default values
```

This message appears the first time you turn on your PK-232 or every time you turn the PK-232 on if the battery jumper is removed. The message will also appear in response to the RESET command.

```
cmd:
```

This is the Command Mode prompt. When this prompt appears, the PK-232 is waiting for you to issue a command. Anything you type after this prompt is interpreted as a command to the PK-232.

was
now

Whenever you change one of the PK-232's parameters, both the previous value and the new value are displayed.

bbRAM scanned, checksum failed!

This message indicates there has been an error in the battery backed RAM. A low lithium battery is the likely cause for this.

ERROR: Subroutine, Bank, Addr

This message indicates a program error has occurred. Write down any information accompanying this message and call AEA's Technical Support department. If possible, print a DISPLAY Z parameter listing.

ROM error, checksum $xxxx

This message indicates there has been a failure in the PK-232. If this message appears, call AEA's Technical Support department.

A.4.2 General Error Messages

An error message is displayed if the PK-232 does not understand what you typed, or needs more information. If you see an Error message, look up the Command to make sure you are entering it properly.

?What?

Your first entry is not a command or a command abbreviation - your PK-232 did not understand your instructions!

?bad

You typed a command name correctly, but the remainder of the command line was not understood.

?callsign

You typed a call sign that does not meet the PK-232's requirements.

?clock not set

You typed the command DAYTIME, but you haven't yet set the clock!

?not enough

You didn't type enough arguments for a command that needs several.

?range

You typed a numeric argument too large or too small for that command.

?too many

You typed too many arguments for the command to accept.

?too long

You typed a command line that is too long. For example, if you type a BTEXT or CTEXT message that is too long you'll receive this message.

?need ALL/NONE/YES/NO

This message indicates you have forgotten the ALL, NONE, YES or NO parameter in the CFROM, DFROM or MFROM commands.

*** Transmit data remaining

If the PK-232 is commanded back to receive with the RCVE command when it still has data in the transmit buffer waiting to be sent.

not while in (MODE)

This message will appear any time you try to do something that is not permitted in the current PK-232 operating mode.

Serial port configuration will change on next RESTART

This message means you have changed the terminal baud rate TBAUD, word-length AWLEN or the PARITY. When you type the RESTART command, the new baud rate will take affect.

?need MYSelcal or ?need MYIdent

This message will appear if you try to communicate with another AMTOR station before you have entered a valid SELCALL (MYSELCAL) or MYIDENT.

?not enough memory available

This message appears if you try to change to FAX when the MailDrop is too full.

A.4.3 Packet Error Messages

In addition to the General Error Messages described above, the following messages may appear when entering Packet related commands.

?need MYcall

This message appears if you attempt to make a packet Connection but have not yet entered your callsign in MYCALL.

?not while connected

You attempted to change MYCALL or AX25L2V2 while in a connected state.

?not while disconnected

You tried to set CONPERM while disconnected.

LINK OUT OF ORDER, possible data loss

You are CONPERMed to another packet station but the link has failed.

?VIA

You typed more than one call sign for the CONNECT or UNPROTO commands without the VIA keyword.

?channel must be 0-9

You typed an invalid channel character after the CHSWITCH character.

?different connectees

You tried to CONNECT to more than one station on the same channel.

?already connected (or attempting connection) to that station

You tried to CONNECT to a station to which you're already connected.

too many packets outstanding

The message appears if you've typed enough data to fill the outgoing buffer in either Converse or Transparent Mode. You cannot re-enter Converse or Transparent until some of the packets have been sent.

WARNING: Beacon too often

This Warning message appears if you have set the BEACON interval timer to less than 90 (15 minutes) which is too often for busy channels.

WARNING: CHeck/FRack too small

This Warning message appears if you have set the CHECK timer for too short a time relative to the FRACK timer.

WARNING: RESptime/FRack too large

This Warning message appears if you have set the RESPTIME timer for too long a time relative to the FRACK timer.

WARNING: TXdelay too short

This Warning message appears if the TXDELAY timer has been set too short to send at least one complete flag before the start of a packet.

WARNING: AUdelay > TXdelay

This Warning message appears if the AUDELAY timer has been set equal to or greater than the TXDELAY timer.

A.4.4 Packet Link Status Messages

Link status messages show you the status of AX.25 connections in which your PK-232 is involved.

*** CONNECTED to: call1 [via call2[,call3...,call9]]

This message appears when your PK-232 switches to the connected state.

*** Connect request: call1 [via call2[,call3...,call9]]

Your PK-232 has received but not accepted a connect request from a distant station.

*** DISCONNECTED: (call sign)

Your PK-232 has switched to the disconnected state. This message may be preceded by a message explaining the reason for the disconnect.

*** Retry count exceeded
*** DISCONNECTED: <call sign>

Your PK-232 has been disconnected because of a retry failure, rather than a disconnect request from one of the stations.

*** <call sign> busy
*** DISCONNECTED: <call sign>

Your connect request was rejected by a busy signal from another station.

FRMR sent: xx xx xx or FRMR rcvd: xx xx xx

Your PK-232 is connected but a protocol error has occurred. Your PK-232 is trying to re-synchronize frame numbers with the distant station's packet system. The string xx xx xx is replaced with the hex codes for the three bytes sent in the FRMR frame.

A.4.5 MailDrop Error Messages

The following messages appear as a result of entering an invalid or unrecognized command to the PK-232's MailDrop.

*** What?

You have entered a command that the MailDrop does not recognize.

*** Need callsign.

You have tried to send a message but not specified who you want to send it to.

*** Message not found.

You have tried to List or Read message(s) that the MailDrop could not find. This also appears if you try to List messages when there are no messages in your MailDrop.

*** No free memory.

You have tried to send a message, but the MailDrop does not have any memory for more messages. You must Kill messages to make room.

*** Not your message.

A remote user will get this when trying to read a message number that is addressed to another station.

3Rdparty ON|OFF — Default: OFF
Mode: Packet/MailDrop — Host: 3R

Parameters:

ON - The MailDrop will handle third party traffic.
OFF - The MailDrop will only handle mail to or from MYCALL or MYMAIL.

If 3RDPARTY is ON, then remote MailDrop users may leave messages for any station.

5Bit — Immediate Command
Mode: Command — Host: 5B

5BIT is an immediate command allowing the user to store 5-bit Baudot transmissions then write a program to decrypt codes that involve bit inversion or transposition. In 5BIT, a constant of $40 (64 decimal) is added to each received 5-bit character to make it a printable ASCII character in the range of $40-5F. All characters are treated this way, including CR, LF, LTRS and FIGS.

When the user enters 5BIT, the PK-232 displays "OPMODE now BAUDOT". This is not strictly true; however, the BAUDOT LED on the front panel will be lit.

RXREV, RBAUD and WIDESHFT must be set properly for the monitored transmission. SIGNAL is helpful in determining whether a transmission is 5-bit and the settings

for RBAUD and RXREV, but typing OK after SIGNAL selects BAUDOT, not 5BIT.

Do not change modes directly between BAUDOT, 5BIT and 6BIT. Go through some other mode first, such as Packet. These commands do not function in 5BIT: BITINV, CCITT, CODE, MARSDISP, TRACE, USOS, WRU and XMIT.

6Bit — Immediate Command
Mode: Command — Host: 6B

Same as 5BIT, except that the unit receives a 6-bit code and adds a constant of $30 (48 decimal) to yield a range of $30-6F. RXREV, RBAUD and WIDESHFT must be set correctly. SIGNAL is helpful in determining whether a transmission is 6-bit and the settings for RBAUD and RXREV, but OK will not automatically select 6BIT.

When the user enters 6BIT, the PK-232 displays "OPMODE now BAUDOT". This is not strictly true; however, the BAUDOT LED on the front panel will be lit.

Do not change modes directly between BAUDOT, 5BIT and 6BIT. Go through some other mode first, such as Packet. These commands do not function in 6BIT: BITINV, CCITT, CODE, MARSDISP, TRACE, USOS, WRU or XMIT.

8Bitconv ON|OFF — Default: OFF
Mode: Packet/ASCII — Host: 8B

Parameters:

ON - The high-order bit IS NOT stripped in Converse Mode.
OFF - The high-order bit IS stripped in Converse Mode.

8BITCONV permits packet and ASCII transmission of 8-bit data in Converse Mode. When 8BITCONV is OFF (default), the high-order bit (bit seven) of characters received from the terminal is set to 0 before the characters are transmitted.

AAb text — Default: empty
Mode: Baudot, ASCII, AMTOR — Host: AU

Parameters:

text - Any combination of characters up to a maximum of 24 characters.

Use the AAB command to enter an acknowledgment text for Baudot, ASCII and AMTOR.

AAB sends automatic confirmation in Baudot, ASCII and AMTOR in response to a distant station's WRU? request. Set WRU ON or CUSTOM bit-9 to activate your Auto-AnswerBack.

Type "AAB (24-character text)" to store your AnswerBack in memory.

ABaud "n" — Default: 110 bauds
Mode: ASCII — Host: AB

Parameters:

"n" - Specifies the ASCII data rate or signaling speed in bauds from your PK-232 to your radio.

ABAUD sets the radio ("on-air") baud rate only in the ASCII operating mode. This value has no relationship to your computer or terminal program's baud rate. The available "n" ASCII data rates in bauds are:

45, 50, 57, 75, 100, 110, 150, 200, 300, 400, 600, 1200, 2400, 4800 and 9600

AChg — Immediate Command
Mode: AMTOR — Host: AG

ACHG is an immediate command used in AMTOR by the receiving station to interrupt the sending station's transmissions.

As the receiving station, you usually rely on the distant station, your partner in the ARQ "handshake", to send the "+?" command to do the changeover. However, in ARQ (Mode A), you can use the ACHG command to "break in" on the sending station's transmission. Use the ACHG command only when it is needed.

ACKprior ON|OFF — Default: OFF
Mode: Packet — Host: AN

Parameters:

ON - Priority Acknowledgment is enabled.
OFF - This feature is disabled.

This command implements the Priority Acknowledge scheme described by Eric Gustafson (N7CL), which proposes to improve multiple access packet performance on HF and VHF simplex channels with hidden terminals. When a busy channel clears, the acknowledgments are sent immediately, while data and poll bits are held off long enough to prevent collisions with the ACKs. By giving priority to data ACKs, fewer ACKs will collide with other station's data, reducing retries. Digipeated frames are sent immediately. RAWHDLC and KISS force ACKPRIOR off. These are the defaults for a P-persistence system with NO Priority Acknowledgment:

```
ACKPRIOR OFF,  PPERSIST ON,   PERSIST  63,  SLOTTIME 30,
RESPTIME 0,    MAXFRAME 4,    FRACK    5
```

The following are the recommended command settings for Priority Acknowledge:

```
1200 baud VHF packet                          300 baud HF packet
    ACKPRIOR ON                                   ACKPRIOR ON
    PPERSIST ON                                   PPERSIST ON
    PERSIST  84                                   PERSIST  84
    SLOTTIME 30                                   SLOTTIME 8
    RESPTIME 0                                    RESPTIME 0
    MAXFRAME 1 - 7                                MAXFRAME 1
    FRACK    8                                    FRACK    15
    HBAUD    1200                                 HBAUD    300
    VHF      ON  (or TONE 3)                      VHF      OFF (or TONE 0)
    DWAIT    doesn't matter                       DWAIT    doesn't matter
```

Stations using neither the Priority Acknowledge nor the P-persistence schemes should set DWAIT 73 for 1200 baud and DWAIT 76 for 300 baud work. Stations using P-persistence but not Priority Acknowledge should set PERSIST and SLOTTIME to the same values that ACKPRIOR stations are using.

Timewave and TAPR use some different command names to handle P-persistence. The following table should help with the AEA/TAPR command differences:

TAPR_SLOTS	MFJ SLOTMASK	AEA_PERSIST	Remarks
1	$00	255	Disables slotting
2	$01	127	
3		84	
4	$03	63	Default setting
6		42	
8	$07	31	Very busy channel
12		20	
16	$0F	15	Extremely busy channel
64	$3F	3	

Timewave products calculate the TAPR ACKTIME value based on the setting of HBAUD.

The TAPR DEADTIME command is analogous to the Timewave SLOTTIME command.

ACRDisp "n" Default: 0
Mode: ALL Host: AA

Parameters:

"n" - 0 to 255 specifies the screen width, in columns or characters.
0 (zero) disables this function.

The numerical value "n" sets the terminal output format for your needs. Your PK-232 sends a <CR><LF> sequence to your computer or terminal at the end of a line in the Command and Converse Modes when "n" characters have been printed. Most computers and terminals do this automatically so ACRDISP defaults to 0.

When the PK-232 is in the MORSE mode, received data will be broken up on word boundaries if possible. At a column of 12 less than the ACRDISP value, the PK-232 starts looking for spaces in the received data. The first space received after this column forces the PK-232 to generate a carriage return. If ACRDISP is 0 (default), this occurs at column 60. If there are no spaces at or after this column then a carriage return occurs at ACRDISP.

ACRPack ON|OFF Default: ON
Mode: Packet Host: AK

Parameters:

ON - The send-packet character IS added to packets sent in Converse Mode.
OFF - The send-packet character is NOT added to packets.

When ACRPACK is ON (default), all packets sent in Converse Mode include the SEND-PACket character (normally <CR>) as the last character of the packet. When ACRPACK is OFF, the send-packet character is interpreted as a command, and is not included in the packet or echoed to the terminal.
ACRPACK ON and SENDPAC $0D produce a natural conversational mode.

ACRRtty "n" Default: 71 (69 in AMTOR)
Mode: Baudot/ASCII RTTY Host: AT

Parameters:

"n" - 0 - 255 specifies the number of characters on a line before a carriage return <CR> is automatically inserted in your transmitted text.
Zero (0) disables the function.

When sending Baudot or ASCII RTTY, the ACRRTTY feature automatically sends a carriage return at the first space following the "nth" character or column.

Use this option when you are sending and don't want to be bothered by watching the screen or worrying about line length. You should NOT use this option when retransmitting text received from another station; for example, ARRL Bulletins.

ACRRTTY is used in AMTOR, except that AMTOR is limited by international telex practices to a maximum of 69 characters per line. If ACRRTTY is set to 71, in AMTOR the automatic carriage return function operates after 69 characters.

ADDress "n" Default: $0000
Mode: ALL Host: AE

Parameters:

"n" - Zero to 65,535 ($0 to $FFFF) setting an Address in the PK-232 memory.

The ADDRESS sets an address somewhere in the PK-232's memory map. This command is usually used with the IO, MEMORY and the PK commands. It is used primarily by programmers and is of little use without the PK-232 Technical Manual.

ADelay "n" Default: 4 (40 msec.)
Mode: AMTOR Host: AD

Parameters:

"n" - 1 to 9 specifies transmitter key-up delay in 10-millisecond intervals.

ADELAY is the length of time in tens of milliseconds between the time when the PK-232 activates the transmitter's PTT line and the ARQ data begins to flow. The ADELAY command allows you to adjust a variable delay, from 10 to 90 milliseconds to handle the PTT (Push-to-Talk) delay of different transmitters.

In most cases, the default value of 4 (40 milliseconds) is adequate for the majority of the popular HF transmitters. If the AMTOR signal strength is good and you observe periodic errors caused by loss of phasing (shown by rephase cycles in the middle of an ARQ contact) during contacts, it may be necessary to adjust the ADELAY value.

- Be sure that errors and rephasing effects are not caused by the distant station before changing your ADELAY.

- If changing your ADELAY values does not improve link performance, reinstall your original value and ask the other station to try changing his ADELAY.

Because the ARQ mode allows 170 milliseconds for the signal to travel to the distant station and return, increasing ADELAY will reduce the maximum working distance. The maximum theoretical range of an ARQ contact is limited to about 25,500 kilometers. Using some of that time as transmit delay leaves less time for signal propagation. Thus the maximum distance available is reduced.

Regardless of the setting of ADELAY, ARQ (Mode A) AMTOR may not work very well over very short distances, e.g., one or two miles. However, in very short distance work, ARQ should not be necessary to achieve error-free copy.

AFilter ON|OFF Default: OFF
Mode: ALL Host: AZ

Parameters:

ON - The ASCII characters specified in the MFILTER are filtered out and never sent to the terminal or computer.
OFF - Characters in MFILTER list are only filtered from monitored packets.

Some terminals and computers use special characters to clear the screen or perform other "special" functions. Placing these characters in the MFILTER list, and turning AFILTER ON will keep the PK-232 from sending them.

Exception: When ECHO is ON, and the terminal or computer sends a filtered character, the PK-232 will echo it back to the terminal or computer.

AFILTER works regardless of mode, or CONNECT/CONVERSE/TRANSPARENT status. One must be careful to leave AFILTER OFF during Binary file transfers.

ALFDisp ON|OFF — Default: ON
Mode: All — Host: AI

Parameters:

ON - A line feed character <LF> IS sent to the terminal after each <CR>.
OFF - A <LF> is NOT sent to the terminal after each <CR>.

ALFDISP controls the display of carriage return characters received, as well as the echoing of those that are typed in.

When ALFDISP is ON (default), your PK-232 adds a line feed <LF> to each carriage return <CR> received, if needed. If a line feed was received either immediately before or after a carriage return, ALFDISP will not add another line feed. Use the PK-232's sign-on message to determine how carriage returns are being displayed. ALFDISP affects your display; it does not affect transmitted data.

Set ALFDISP ON if the PK-232's sign-on message lines are typed over each other.
Set ALFDISP OFF if the PK-232's sign-on message is double spaced.
ALFDISP is set correctly if the PK-232's sign-on message is single spaced.

ALFPack ON|OFF — Default: OFF
Mode: Packet — Host: AP

Parameters:

ON - A <LF> character IS added after each <CR> sent in outgoing packets.
OFF - A <LF> is NOT added to outgoing packets (default).

ALFPACK is similar to ALFDISP, except that the <LF> characters are added to outgoing (transmitted) packets, rather than to text displayed locally.

o If the person you are talking to reports overprinting of packets from your station, set ALFPACK ON. ALFPACK is disabled in Transparent Mode.

ALFRtty ON|OFF — Default: ON
Mode: Baudot/ASCII RTTY — Host: AR

Parameters:

ON - A line feed character <LF> IS sent after each carriage return <CR>.
OFF - A <LF> is NOT sent after each <CR>.

If ALFRTTY is set ON when transmitting Baudot or ASCII RTTY, a line feed character is added and sent automatically after each <CR> character you type.

Use this option when you are typing into the transmit buffer and don't want to be bothered worrying about line length. You should NOT use this option when retransmitting text received from another station; for example, ARRL Bulletins.

o ALFRTTY has no effect in AMTOR; a line feed is automatically added after each carriage return.

AList — Immediate Command
Mode: AMTOR — Host: AL

ALIST is an immediate command that switches your PK-232 into the ARQ Listen mode.

You can usually monitor a contact between two linked stations using the ARQ Listen mode (also called Mode L). This mode may need a few seconds to phase or acquire synchronization with the other stations. Your ability to synchronize with the master station depends on operating conditions such as interference. Your monitor will display all the retries if the linked stations that you are monitoring are experiencing ARQ errors.

Type ALIST (or AL) repeatedly if you lose synchronization.

ALTModem "n" — Default: 0
Mode: Packet — Host: Am

Parameters:

"n" - A numeric value of 0 or 1 selecting either the default (0) PK-232 45-300/1200 baud modem, or the optional (1) 2400 bps DPSK modem.

n is a numeric value 0 or 1, selecting the standard PK-232 modem (ALTMODEM 0, default) or the optional 2400 bps modem (ALTMODEM 1). Only the Packet mode uses ALTMODEM 1. In all other modes, one of the internal FSK/CW modems is selected.

ALTMODEM is used only when the optional internal 2400 bps DPSK modem has been factory installed. Remember to set HBAUD to 2400 when using this modem.

AMtor — Immediate Command
Mode: Command — Host: AM

AMTOR is an immediate command that switches your PK-232 into the AMTOR mode. Your PK-232 is automatically placed in ARQ Standby condition.

Your station is then available for automatic access by and response to any AMTOR station that sends your SELCALL. The PK-232 can communicate using either the CCIR 476 (4-character SELCALL) or the CCIR 625 (7-character SELCALL) protocol. Your monitor will also display any inbound FEC (Mode B) transmissions.

See the MYSELCAL and MYIDENT commands to enter your 4 and 7 character SELCALLs.

ARq aaaa[aaa] — Immediate Command
Mode: AMTOR — Host: AC

Parameters:

aaaa[aaa] - The distant station's 4-character or 7-character SELCALL code.

ARQ is an immediate command that starts an AMTOR Mode A (ARQ) SELCALL (SELective CALL) to a distant station.

To begin the Mode A (ARQ) selective call type "ARQ" followed by the other station's SELCALL:

```
Example:  ARQ NNML          (4-character SELCALL)
or        ARQ VTMFFFF       (7-character SELCALL)
```

As soon as a <CR> is typed, your PK-232 will begin keying your transmitter in the three-character AMTOR ARQ burst sequence. If the distant station receives and decodes your selective call successfully, the two AMTOR systems synchronize and begin the Mode A (ARQ) AMTOR "handshaking" process.

See the MYSELCAL and MYIDENT commands to enter your 4- and 7- character SELCALLs. Other AMTOR commands are ACHG, ACRRTTY, ADELAY, ALFRTTY, ARQTMO, EAS, HEREIS and RECEIVE.

ARQE | Immediate Command
Mode: Command | Host: As

ARQE is an immediate command that switches the PK-232 into the ARQ-E receiving mode.

ARQ-E is similar to 1-channel TDM, except that the 7-bit code is different. Like TDM most ARQ-E stations send idle signals for long periods of time. The PK-232 can only phase on ARQ-E signals that are idling so this is not a problem.

The SIGNAL Identification (SIAM) mode will identify ARQ-E signals for the user. They are identified as "TDM ARQ-E:4" or 'TDM ARQ-E:S,' referring to 4- and 8character repetition cycles used in this mode.

ARQTmo "n" | Default: 60
Mode: AMTOR, Pactor | Host: AO

Parameters:

"n" - 0 to 250 specifies the number of seconds to send an ARQ SELCALL before automatic transmitter shutdown.

ARQTMO sets the length of time during which your ARQ call will be sent, shutting down automatically. As a general rule, if you can't activate another AMTOR or Pactor station in the default time of 60 seconds, you can probably assume that the other station can't hear your transmission.

ARQTOL "n" | Default: 3
Mode: AMTOR ARQ | Host: AO

Parameters:

"n"' 1 to 5, specifying a relative tolerance for bit boundary jitter.

ARQTOL controls the tolerance for received bit boundary jitter in AMTOR ARQ mode. n is a number from 1 (tight tolerance) to 5 (loose tolerance). The number signifies how far away from the expected bit transition time the actual received transition may be, in tenths of a bit (milliseconds). If the transition occurs further away than expected, the received block is counted as an error, even if all three characters in the block appear to be valid AMTOR characters. The default value of ARQTOL 3 is the equivalent of the fixed tolerance of previous firmware releases.

ARQTOL should be set to a low number (tighter tolerance) for applications that require nearly error-free communications. The tradeoff is that good received character blocks are counted as bad if the bit transitions are suspect, thereby causing retransmissions and lowering the effective character rate.

ARQTOL does not affect FEC, SELFEC or ARQ Listen modes.

Ascii	Immediate Command
Mode: Command	Host: AS

ASCII is an immediate command that switches your PK-232 into the ASCII mode.

ASCII is the proper mode to use if you wish to use RTTY to transmit text, data or other information containing lower case and special characters not present in the Baudot/Murray and ITA #2 alphabets or character sets. When 8BITCONV is set ON, 8-bit ASCII data may also be sent and received.

Because the ASCII character set requires a minimum of seven bits to define each character, under worst-case conditions, ASCII is sometimes more subject to data errors and garbled text than Baudot/ITA#2 at the same data rate.

ASPect "n" Default: 2 (576)
Mode: FAX Host: AY

Parameters:

"n" - 1 to 6, specifying the number of FAX scan lines the PK-232 prints out of every 6 lines received.

ASPECT controls the aspect ratio of the length to the width of a FAX image by controlling the number of lines the PK-232 prints out of each 6 received lines.

On most weather charts, the default of ASPECT 2 keeps the shapes received in the right proportion. On other transmissions, you may want more resolution. See the table below for suggested settings.

CCITT IOCs for narrow and wide carriage printers are given for each ASPECT setting below.

ASPECT	CCITT IOC (narrow)		CCITT IOC (wide)	
1	1100		1788	
2	550	(Weather Charts 576)	894	
3	367	(Wirephotos 352)	596	(Weather Charts 576)
4	275	(WEFAX Satellite 288)	447	
5	220		358	(Wirephotos 352)
6	183		298	(WEFAX Satellite 288)

The Index Of Cooperation, or IOC is an international measure of aspect ratio. The formula for the CCITT IOC is:

$$\frac{\text{(vertical scan line density) X (horizontal width)}}{3.14159}$$

Weather charts are transmitted at a nominal CCITT IOC of 576. ASPECT 2 is so close to this that the charts print with no noticeable distortion.

Please note that high settings of ASPECT such as 6 may generate data so often that your printer cannot handle the high data rate.

AUdelay "n" Default: 2 (20 msec.)
Mode: Baudot, ASCII, FEC, FAX and Packet Host: AQ

Parameters:

"n" - 0 - 120 specifies in units of 10 msec. intervals, the delay between PTT going active and the start of the transmit AFSK audio tones.

In some applications it may be desirable to create a delay from the time that the radio PTT line is keyed and the time that audio is produced from the PK-232.

Most notably, on HF when an amplifier is used, arcing of the amplifier relay contacts may occur if drive to the amplifier is applied before the contacts have closed. If arcing occurs, increase AUDELAY slowly until the arcing stops.

In VHF or UHF FM operation, some synthesized transceivers may produce undesirable spurious emissions, if audio and PTT are applied at the same time. These emissions may be reduced by setting AUDELAY to roughly 1/2 of TXDELAY.

Please note that AUDELAY must always be less than TXDELAY. It is advisable that AUDELAY be set lower than TXDELAY by a setting of 10. For example, you have determined that a TXDELAY of 20 works well for your transceiver. Subtracting 10 from 20 yields 10, which is the recommended setting for AUDELAY. If a setting of AUDELAY of 10 is too short, then set both TXDELAY and AUDELAY higher.

AUTOBaud ON|OFF Default: OFF
Mode: Command Host: Ab

Parameters:

ON - Autobaud Routine always present at Power-ON or RESTART.
OFF - Autobaud Routine active at Power-ON only if battery jumper is removed.

When AUTOBAUD is OFF (default), the unit performs the autobaud function only when powering ON or after a RESET. When AUTOBAUD is ON, the PK-232 performs the autobaud routine EVERY time it is powered ON, and EVERY time the RESTART command is entered. The stored parameters (e.g. MYCALL) are saved if the battery jumper is connected. The unit displays the autobaud message at the same rate as the last setting of TBAUD. AUTOBAUD ON is helpful when moving the unit from one computer to another, where the terminal data rates are different.

In the autobaud routine, only one asterisk (*) is needed to set the terminal speed TBAUD. The autobaud routine detects 110, 300, 600, 1200, 2400, 4800 and 9600 baud, at either 7 bits even parity, or 8 bits no parity.

AWlen "n" Default: 7
Mode: All Host: AW

Parameters:

"n" - 7 or 8 specifies the number of data bits per word.

The parameter value defines the digital word length used by the serial input/output (I/O) terminal port and your computer or terminal program.

AWLEN will probably be set properly by the PK-232 Autobaud routine. Still you may want to change the ASCII word-length at some time to accommodate a terminal program you wish to use.

For plain text conversations with the PK-232, an AWLEN of 7 or 8 may be used. For binary file transfers and HOST Mode operation, an AWLEN of 8 MUST be used.

The RESTART command must be issued before a change in word length takes effect. Do NOT change AWLEN unless the terminal can be changed to the same setting.

Ax25l2v2 ON|OFF Default: ON
Mode: Packet Host: AV

Parameters:

ON - The PK-232 uses AX.25 Level 2 Version 2.0 protocol.
OFF - The PK-232 uses AX.25 Level 2 Version 1.0 protocol.

This command allows the selection of either the old (version 1) version of the AX.25 packet protocol or the current (version 2.0) protocol. Some implementations of version 1 of AX.25 protocol won't properly digipeat Version 2.0 AX.25 packets. Most users run AX.25 version 2 but this command allows returning to the older version if necessary for compatibility.

AXDelay "n" Default: 0 (00 msec.)
Mode: Packet Host: AX

Parameters:

"n" - 0 to 180 specifies a key-up delay for voice repeater operation in ten-millisecond intervals.

AXDELAY specifies the period of time the PK-232 will wait - in addition to the delay set by TXDELAY - after keying the transmitter and before data is sent. Packet groups using a standard "voice" repeater to extend the range of the local area network may need to use this feature.

Repeaters with slow electromechanical relays, auxiliary links (or other circuits which delay transmission after the RF carrier is present) require more time to get RF on the air. Try various values to find the best value for "n" if you're using a repeater that hasn't been used for packet operations before. If other packet stations have been using the repeater, check with them for the proper setting. AXDELAY acts together with AXHANG.

AXHang "n" — Default: 0 (000 msec.)
Mode: Packet — Host: AH

Parameters:

"n" - 0 to 20 specifies voice repeater "hang time" in 100-millisecond intervals.

AXHANG allows you to increase efficiency when sending packets through an audio repeater that has a hang time greater than 100 milliseconds.

When the PK-232 has heard a packet sent within the AXHANG period, it does not add the repeater keyup delay (AXDELAY) to the key-up time. Try various values to find the best value for "n" if you are using a repeater that hasn't been used for packet operations before. If other packet stations have been using the repeater, check with them for the proper setting.

BAudot — Immediate Command
Mode: Command — Host: BA

BAUDOT is an immediate command that switches the PK-232 into the Baudot mode.

Baudot RTTY operation is very common around the world, and is the basis of the telex network and most radio press, weather and point-to-point message services. The Baudot/Murray and ITA #2 character sets do not contain lower case or the special punctuation and control characters found in ASCII. Because the Baudot/ITA #2 code requires only five information bits to define each character, it will generally suffer fewer errors than ASCII code at the same data rate.

BBSmsgs ON|OFF — Default: OFF
Mode: Packet — Host: BB

Parameters:

ON - Makes the PK-232 status messages look like the TAPR-style output.
OFF - The PK-232 status messages work as before (default).

When BBSMSGS is ON, some of the status messages change or are suppressed which may improve operation of the PK-232 with some BBS software. The following AEA PK-232 status messages are suppressed or changed if BBSMSGS is ON:

No "(parm) was (value)"
No "(parm) now (value)"
Connect messages: No "; v2; 1 unACKed"
No "xxx in progress: (dest) via (digis)"
No space after comma in digipeater lists
"VIA" in upper case
If MRPT is ON, digi paths are displayed in TAPR format
No "*** connect request:"
No "*** retry count exceeded"
Sends carriage return before all other "***"
No "(callsign) busy" message

Beacon EVERY|AFTER "n" Default: EVERY 0 (00 sec.)
Mode: Packet Host: BE

Parameters:

EVERY - Send the beacon at regular intervals.
AFTER - Send the beacon after the specified time interval without activity.
"n" - 0 to 250 sets beacon timing in ten-second intervals.
"0" - Zero turns off the beacon (default).

The BEACON command sets the conditions under which your beacon will be sent. A beacon frame contains the text that you've typed into the BTEXT message in a packet addressed to the UNPROTO address. When the keyword EVERY is specified a beacon packet is sent every "n" times ten seconds. When AFTER is specified, a beacon is sent after "n" times ten seconds have passed without packet activity.

If you set the BEACON timing less than "90" - a value judged as too short for busy channels - you'll see the following message at each command prompt:

WARNING: BEACON too often

BItinv "n" Default: $00
Mode: RTTY Host: BI

Parameters:

"n" - 0 to $1F, (0 to 31 decimal) specifies a number to be exclusive-ORed with every received Baudot character. BITINV 0 is plain text.

Bit inversion is used to prevent listeners from reading some commercial Baudot transmissions. Usually either 2 or 3 bits of each character are inverted to give the appearance of an encrypted transmission. Try different settings of BITINV on a Baudot signal after the baud rate has been determined. If you are interested encrypted transmissions try experimenting with the 5BIT command.

BKondel ON|OFF Default: ON
Mode: All Host: BK

Parameters:

ON - The sequence <BACKSPACE><SPACE><BACKSPACE> is echoed when a character is deleted from the input line.
OFF - The <BACKSLASH> character <\> is echoed when a character is deleted.

BKONDEL determines how character deletion is displayed in Command or Converse mode. When BKONDEL is ON (default) the <BACKSPACE><SPACE><BACKSPACE> sequence is produced which updates the video display screen erasing the character.

On a printing terminal the <BACKSPACE><SPACE><BACKSPACE> sequence will result in overtyped text. Set BKONDEL OFF if you have a paper-output display, or if your terminal does not respond to the <BACKSPACE> character <CTRL-H>. When BKONDEL is OFF the PK-232 displays a <BACKSLASH> for each character you delete. You can get a display of the corrected input by typing the REDISPLAY-line character.

BText text — Default: empty
Mode: Packet — Host: BT

Parameters:

text - Any combination of characters up to a maximum length of 120 characters.

BTEXT is the content of the data portion of a beacon packet. The default text is an empty string (no message). When and how packet beacons are sent is discussed in more detail under the BEACON command.

Although the beacon subject is controversial in packet circles, you can use beacon texts intelligently and benefit the packet community.

- Don't type your call sign in BTEXT - the normal packet header shows it.
- Don't fill BTEXT with screen graphics. Use BTEXT for meaningful information.
- After you've beaconed for a week or two and people know who you are, follow the practice used by more experienced packeteers: SET BEACON EVERY 0!
- Use a "%," "&", "N," "NO," "NONE," or OFF as the first characters in the text to clear the BTEXT text.

CALibrate — Immediate Command
Mode: Command — Host: Not Supported

CALIBRATE is an immediate command that starts the AFSK transmit tone calibration. The PK-232 provides a continuous on-screen display of AFSK generator tone frequencies in Hertz. The frequency is displayed approximately twice per second, with the part number of the potentiometer associated with that tone.

When Calibration is checked all packet connections will be lost, and the time-of-day clock will not advance until you quit the calibration routine. Commands available in the calibration routine are:

K	Toggles the PK-232's PTT and CW keying outputs between ON and OFF.
Q	Quits the calibration routine.
H	Toggles the generator between wide (1000 Hz) and narrow (200 Hz) shift.
<SPACE>	Toggles the audio tone between "mark" (low) and "space" (high) tones.
D	Toggles between transmitting a continuous tone or alternating the mark and space tones at a rate set by the radio baud (HBAUD) rate.

FREQUENCY	RESISTOR	FUNCTION
2310	R164	HF SPACE, RTTY SPACE
2200	R165	VHF SPACE, WIDESHIFT SPACE
1200	R167	VHF MARK, CW AFSK, WIDESHIFT MARK This tone should be adjusted before R168
2110	R168	HF MARK, RTTY MARK

CANline "n" Default: $18 <CTRL-X>
Mode: All Host: CL

Parameters:

"n" - 0 to $7F (0 to 127 decimal) specifies an ASCII character code.

The parameter "n" is the ASCII code for the character you want to use to cancel an input line. You can enter the code in either hex or decimal.

When you use the CANLINE character to cancel an input line in Command Mode, the line is terminated with a <BACKSLASH> character and a new prompt (cmd:) appears. When you cancel lines in Converse Mode, only a <BACKSLASH> and a new line appear.

- You can cancel only the line you are currently typing.
- Once <CR> or <Enter> has been typed, you cannot cancel an input line.

NOTE: If your send-packet character is not <CR> or <Enter>, the cancel-line character cancels only the last line of a multi-line packet.

CANPac "n" Default: $19 <CTRL-Y>
Mode: Packet, Command Host: CP

Parameters:

"n" - 0 to $7F (0 to 127 decimal) specifies an ASCII character code.

The parameter "n" is the ASCII code for the character you want to type in order to cancel an input packet or to cancel display output from the PK-232.

You can only cancel the packet that is being entered in CONVERSE Mode. When you cancel a packet, the line is terminated with a <BACKSLASH> and a new line. You must cancel the packet before typing the send-packet character.

In the COMMAND mode, this character cancels displayed output from the PK-232. Typing this character once cancels ALL output from the PK-232 to your display. Typing the cancel-output character again restores normal output.

CASedisp "n" Default: 0 (as is)
Mode: Packet Host: CX

Parameters:

"n" - 0 to 2 specifies how your PK-232 sends characters to your terminal.

CASEDISP allows you to set the case of the characters your PK-232 sends to your terminal. CASEDISP offers three possible modes:

CASEDISP 0	"As is" - characters are not changed.
CASEDISP 1	"lower" - all characters are displayed in lower case only.
CASEDISP 2	"UPPER" - all characters are displayed in upper case only.

CASEDISP has no effect on your transmitted data.

CBell ON|OFF — Default: OFF
Mode: Packet/AMTOR — Host: CU

Parameters:

ON - Three BELL characters <CTRL-G> ($07) are sent to your terminal with the "*** CONNECTED to or DISCONNECTED from (call sign)" message.
OFF - BELLS are NOT sent with the CONNECTED or DISCONNECTED message.

Set CBELL ON if you want to be notified when someone connects to or disconnects from your station in Packet, or upon establishing a link in AMTOR.

CFrom all,none,yes/no call1[,call2..] — Default: all
Mode: Packet — Host: CF

Parameters:

call - all, none, YES list, NO list.
List of up to 8 call signs, separated by commas.

CFROM determines how your PK-232 responds to connect requests from other stations. CFROM is set to "all" when you first start your PK-232.

To reject all call requests, type CFROM NONE. Your PK-232 sends the calling station a DM packet, or "busy signal."

To accept calls from one or more specific stations, type CFROM YES (followed by a list of calls signs). Connects will be accepted from stations whose call signs are listed after CFROM YES. For example:

```
cmd:cfrom yes WX1AAA,WX2BBB,WX3CCC,WX4DDD
```

To reject calls from one or more specific stations, type CFROM NO (followed by a list of call signs). Connect requests will be ignored from stations whose call signs are listed after CFROM NO.

You can include optional SSIDs specified as "-n" after the call sign. If CFROM is set to "no W2JUP", connect attempts from all SSIDs of W2JUP (W2JUP-0 through W2JUP-15) will be ignored. If CFROM is set to "yes W2JUP-1", then only W2JUP-1 will be allowed to connect. Clear CFROM with "%" "&" or "OFF" as arguments.

CHCall ON|OFF — Default: OFF
Mode: Packet — Host: CB

Parameters:

ON - Call sign of the distant station IS displayed in multiple connection packet operation.
OFF - Call sign of the distant station is NOT displayed (default).

With CHCALL ON, the call signs of the distant stations appear after the channel identifier when you are connected to more than one packet station. When CHCALL is OFF, only the channel number is displayed in multiple connection operation.

When CHCALL is OFF, the monitored activity looks like this:

```
:0hi John
hello Mike how goes it?
:1*** CONNECTED to N7GMF
:1must be a dx record. ge John
```

When CHCALL is ON, the same contact has the additional underlined information:

```
:0:N7ML:hi John
hello Mike how goes it?
:1:N7GMF:*** CONNECTED to N7GMF
:1must be a dx record. ge John
```

CHDouble ON|OFF — Default: OFF
Mode: Packet — Host: CD

Parameters:

ON - Received CHSWITCH characters appear twice (doubled).
OFF - Received CHSWITCH characters appear once (not doubled).

CHDOUBLE ON displays received CHSWITCH characters as doubled characters.

Set CHDOUBLE ON When operating with multiple connections to tell the difference between CHSWITCH characters received from other stations and CHSWITCH characters generated by your PK-232. In the following example CHDOUBLE is ON and CHSWITCH is set to "|" ($7C):

```
|| this is a test.
```

The sending station actually transmitted:

```
| this is a test.
```

The same frame received with CHDOUBLE OFF would be displayed as:

```
| this is a test.
```

CHeck "n" — Default: 30 (300 sec.)
Mode: Packet — Host: CK

Parameters:

"n" - 0 to 250 specifies the check time in ten-second intervals.
0 - Zero disables this feature.

CHECK sets a time-out value for a packet connection if the distant station has not been heard from for CHECK times 10 seconds.

Without the CHECK feature, if your PK-232 were connected to another station and the other station disappeared, your PK-232 would remain connected indefinitely, perhaps refusing connections from other stations.

Your PK-232 tries to prevent this sort of "lockup" from occurring depending on the settings of AX25L2V2 and RECONNECT, by using the CHECK timer as follows:

- o If a Version 1 link is inactive for (CHECK times 10 seconds), your PK-232 tries to save the link by starting a reconnect sequence. The PK-232 enters the "connect in progress" state and sends "connect request" frames.

- o If a Version 2 link (AX25L2V2 ON) is inactive and packets have not been heard from the distant end for "n" times 10 seconds, your PK-232 sends a "check packet" to test if the link still exists to the other station. If your PK-232 does not get an answer to the "check packet" after RETRY+1 attempts, it will attempt to reconnect to the distant station.

See the RELINK command.

CHSwitch "n" Default: $00
Mode: Packet Host: CH

Parameters:

"n" - 0 to $FF (0 to 255 decimal) specifies an ASCII character code.

CHSWITCH selects the character used by both the PK-232 and the user to show that a new connection channel is being addressed. DO NOT USE $30 to $39 (0 to 9).

If you plan to use multiple packet connections, you MUST select a CHannel SWITCHing character. This character will be interpreted by the PK-232 to indicate that you want to select another "logical" packet channel.

The vertical bar "|" ($7C) is not used often in conversations and makes a good switching character. To make the Channel Switching character the vertical bar, simply enter the command CHSWITCH $7C.

To change the logical packet channel you are using with the PK-232, then simply type the vertical bar "|" followed by a number 0 through 9 indicating which logical channel you wish the PK-232 to use.

See CHDOUBLE and CHCALL for further information on the use of CHSWITCH.

CMdtime "n" Default: 10 (1000 msec.)
Mode: All Host: CQ

Parameters:

"n" - 0 to 250 specifies TRANSPARENT Mode time-out value in 100-millisecond intervals.
If "n" is 0 (zero), exit from Transparent Mode requires sending the BREAK signal or interruption of power to the PK-232.

CMDTIME sets the time-out value in Transparent Mode. A guard time of "n" times 10 seconds allows escape to Command Mode from Transparent Mode, while permitting any character to be sent as data.

The same Command Mode entry character COMMAND (default <CTRL-C>) is used to exit Transparent Mode, although the procedure is different than from Converse mode. Three Command Mode entry characters must be entered lose than On'. times 10 seconds apart, with no intervening characters, after a delay of 'n' times 10 seconds following the last characters typed.

The following diagram illustrates this timing:

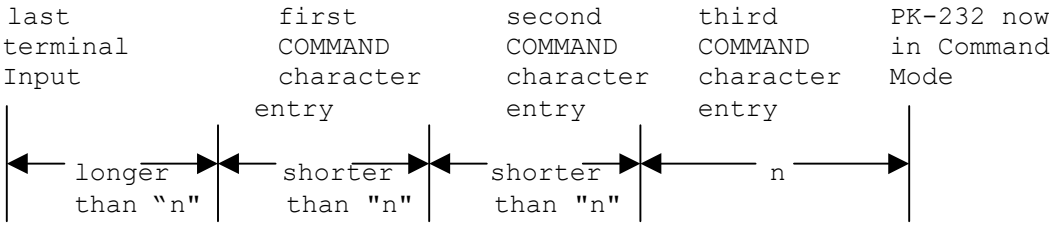

CKSG ON OFF Default: OFF
Mode: Packet Host: CM

Parameters:

ON - The recorded CTEXT message is sent as the first packet after a connection is established by a connect request from a distant station.
OFF - The text message is not sent at all.

CMSG (default OFF) enables or disables automatic transmission of the CTEXT message when your PK-232 accepts a connect request from another station. Set CMSG ON to give others a message when they connect to your PK-232 or invite them to leave a message on your MailDrop if you are not there. (See MTEXT.)

CODE "n" Default: 0
(International)
Mode: Baudot RTTY, Morse, AMTOR Host: Cl

Parameters:

".n" — 0 to 6 specifies a code from the list below.

CODE	Meaning	Morse	Baudot	AMTOR	PACKET
0	International	RX/TX	RX/TX	RX/TX	-
1	US teleprinter		RX/TX	RX/TX	-
2	Cyrillic	RX	RX/TX	RX/TX	-
3	Transliterated Cyrillic	RX	RX	RX	-
4	Katakana	RX/TX	-	-	-
5	Transliterated Katakana	RX	-	-	-
6	European	RX	-	-	RX

Note that not all the codes in the list above can be transmitted. In the Morse, Baudot and AMTOR columns below, RX means receive only, and RX/TX means both transmit and receive are enabled.

NOTE: FCC Part 97.69 and 97.131 calls for the use of (CODE 0) 'International Telegraph Alphabet Number 2" five unit teleprinter code. The Baudot characters "S", "#" and "&'' are NOT permitted for use by US Amateurs.

CODE 0: International

In Morse, this means the International Morse Code.
For Baudot and AMTOR, this means the ITA #2 teleprinter code, which is internationally recommended for Baudot and TOR communications and shown below:

LOWER CASE SET	UPPER CASE SET
1 2 3 4 5 6 7 8 9 0	? ? ? ? ? ? ? ? ( ) ? +
Q W E R T Y U I 0 P ? ?	Q W E R T Y U I 0 P ? ?
A S D F G H J K L ? `	A S D P G H J K L : ?
Z X C V B N M , . /	Z X C V B N M , . ?

The following special Morse characters are available as receive only and are used in non-English Morse alphabets.

Morse	Receive
----	ch
-.-..	c
.-..-	e
--..-	z
--.--	ñ

In response to requests from European customers, the "national' ITA#2 characters unassigned in the US have been made available for both transmission and reception. FIGS-F, FIGS-G and FIGS-H have been assigned characters according to standard use and are shown below. Note that some national alphabets use these characters for accented letters not appearing in English.

Baudot Character	ITA 12 CODE 0	U.S. CODE 1
FIGS-F	!	!
FIGS-G	}	&
FIGS-H	}	#
3rd-Q	q	

CODE 1: US Teleprinter

In Morse, this has no effect; the unit will use the International Morse Code and NOT the American Morse code. In Baudot and AMTOR, the US teleprinter character set shown below is used. Users of CODE I should be aware of the following:

The US teleprinter code (CODE 1) makes the "1", "$", ",” and "#" characters available in Baudot and AMTOR. The WRU character, "=" and the "+" characters are lost when CODE is set to 1. Since there is no "+" character in the CODE I character set there should be no way to turn over the AMTOR link and change from ISS to the IRS. To avoid this problem, the PK-232 sends a FIGS-Z when the "+" key is pressed in AMTOR and responds to the reception of the "FIGS-Z" '?" sequence so the direction of traffic can be reversed.

US Teleprinter character set.

LOWER CASE SET	UPPER CASE SET
1 2 3 4 5 6 7 8 9 0 -	! # $ & ( )
Q W E R T Y U I 0 P	Q W E R T Y U I 0 P
A S D F G H J K L ; `	A S D F G H J K L : `
Z X C V B N M ` . /	Z X C V B N M , . ?

The differences between ITA 02 and US teleprinter codes are listed below:

BaudotI Character	ITA 02 CODE 0	U.S. CODE 1
FIGS-D	WRU	$
FIGS-F	|	!
FIGS-G	{	&
FIGS-H	}	#
FIGS-I	BELL	`
FIGS-S	`	BELL
FIGS-V	=	;
FIGS-Z	+	"
3rd-Q	q	

Please Note that for U.S. Amateurs, the F.C.C. regulations require Baudot and AMTOR transmissions follow CCIR Recommendations which require the ITA#2 (CODE 0) be used. Technically, it is illegal to use CODE 1 on the U.S. Amateur bands. MARS operators and Amateurs outside the U.S. may find CODE 1 useful.

CODE 2: Cyrillic

This code causes a translation to an artificially extended ASCII, so that all received characters are converted to single ASCII characters. The character set used prior to July 1991 was arbitrary, but we have now changed the character set to one which we believe to be used presently in the USSR.

The extensions used in Morse reception are shown below:

Morse	ASCII	English pronunciation	
.-.-	$71 q	YA	
---.	$7E ~	CH	(Morse only)
..--	$60 `	YU	
--.-	$7D]	SHCH	
----	$7B {	SH	

In Baudot and AMTOR, Russian transmitters use a third register to transmit Cyrillic characters in addition to the LTRS and FIGS. They use LTRS to transmit the Roman alphabet. As LTRS and FIGS characters are used to access the first and second registers, they use the BLK or NUL character '00, to access the third register. The PK-232 displays third-register characters as lower-case alphabetic characters, and all FIGS characters in CODE 0 with the following exceptions:

Character	Code	2	English Pronunciation
FIGS-F	$7C	|	E
FIGS-G	$7B	{	SH
FIGS-H	$7D	{	SHCH
FIGS-I	$60	`	YU
3rd-Q	$71	q	YA

If several words end in "DJ", "OW" or "OGO" the transmission is probably Russian.

There is no separate Baudot combination for the CH character. The Russians use a "4" because the Cyrillic character for CH resembles a "4".

It is safe to leave CODE set to 2 if you are not sure which alphabet the transmitting station is using. You will be able to see the message in either alphabet with minimal garbling, and you can then set CODE to either 0 or 3.

Another interesting side effect of being able to send and receive in CODE 2 is that it is now possible to send and receive both upper and lower case text in Baudot and AMTOR modes. To do this, both station must have CODE 2 enabled and of course both must be running 1991 or later firmware in their PK-232's. Other users will see only upper case characters and not be aware that anything unusual is happening, as the feature merely inserts NULL characters at strategic times. An Timewave PK-232 using CODE 2 in QSO with a unit in CODE 0 (or any other equipment) will exchange data in upper case only, with no adverse effects.

This feature may be advantageous to users of the AMTOR MailDrop who want their messages to be forwarded to the packet network. The ability to send and receive upper and lower case characters in AMTOR should improve message readability when it is translated to Packet and vice versa.

CODE 3: Transliterated Cyrillic

This code is similar to CODE 2, except that some characters are transliterated into English phonetic equivalents for easier reading.

CODE 2	CODE 3	
w	V	
v	ZH	
h	KH	
c	TS	
~	CH	(Morse only)
{	SH	
]	SHCH	
x	`	
|	E	(RTTY only)
`	YU	
q	YA	

CODE 4: Katakana

Katakana is the-phonetic character set used in Japan for spelling out words of foreign (to Japan) origin. The Japanese also use Katakana for Morse and some computer communication. There are about 5O Katakana characters. CODE 4 translates the Katakana Morse code into an 8-bit extended version of ASCII. The characters displayed are generally in the range from $AO to $DF, except for numerals and punctuation. If you are using CODE 4, remember to set the PK-232 for AWLEN 8, PARITY 0 and 8BITCONV ON.

CODE S: Transliterated Katakana

This is similar to CODE 4, except that the extended ASCII is transliterated into English equivalents for easier reading. The Morse characters are translated into 2- and 3-letter syllables.

CODE 6: European

This is primarily for users with German language terminals.
The differences in Morse coding are as follows:

Morse	CODE 0	CODE 6
.-.-	$5B	$5B
---.	$5C	$5C
..--	$5E	$5D
.--.-	$5D	

In addition, CODE 6 avoids the use of square brackets ($5B, $5D) in monitored packet headers and maildrop prompts, using parentheses instead.
US ASCII square bracket characters are used as extended alphabetic characters in most languages outside of English.

COMmand "n" Default: 03 <CTRL-C>
Mode: All Host: CM

Parameters:

"n" 0 to $7F (O to 127 decimal) specifies an ASCII character code.

COMMAND changes the Command Mode entry character (default <CTRL-C>). Type the COMMAND character to enter Command Made from the Converse or Transparent Mode. The Command prompt (cmd:) appears, indicating successful entry to Command Mode. See the CKDTIME command.

CONmode CONVERSE/TRANS Default: CONVERSE
Mode: Packet, Pactor Host: CB

Parameters:

CONVERSE- Your PK-232 enters Converse Mode when a connection in established.
TRANS - Your PK-232 enters Transparent when a connection is established.

CONMODE selects the mode your PK-232 uses after entering the CONNECTED state. For most operation, setting CONMODE to CONVERS (default) is most natural.

Connect call1 (VIA call2(,call3 .... call9) mmediate Command
Mode: Packet Host: CE

Parameters:

call1 — Call sign of the distant station to which you wish to be connected.
call2 — Optional call sign(s) of up to eight digipeaters via which you'll be
call9 — repeated to reach the distant station.

Use the CONNECT command to send a Packet connect request to station "call1," directly or via one or more digipeaters (call2 through call9). Each call sign can include an optional SSID "-n" immediately after the call sign.

The part of the command line shown in brackets below is optional, and is used only when connecting through one or more digipeaters. Type the digipeater fields in the exact sequence you wish to use to route your packets to destination station "call1" (Don't type the brackets or quotation marks)

VIA call2[, ca113 .... ,call9]]

You can type the command CONNECT at any time to check the status.
If you are trying to connect to another station, you will see the message;

Link state is: CONNECT in progress

If the distant station doesn't "ack" your connect request after the number of tries in RETRY, the CONNECT attempt is canceled. Your monitor displays:

cmd:*** Retry count exceeded
DISCONNECTED: (call sign)

CONPerm ON|OFF — Default: OFF
Mode: Packet — Host: CY

Parameters:

ON - The connection on the current channel is maintained.
OFF - The current channel can be disconnected from the other stations.

When ON, CONPERM forces the PK-232 to maintain the current connection, even when frames to the other station exceed RETRY attempts for an acknowledgment.

CONStamp ON|OFF — Default: OFF
Mode: Packet — Host: CG

Parameters:

ON - Connect status messages ARE time stamped.
OFF - Connect status messages are NOT time stamped.

CONSTAMP activates time stamping of *** CONNECTED status messages.
If CONSTAMP is ON and DAYTIME (the PK-232's internal clock) is set, the time is sent with CONNECT and DISCONNECT messages. For example, if the clock is set and CONSTAMP is ON, a connect and disconnect sequence appears as follows:

```
cmd:10:55:23  *** CONNECTED to W2JUP
cmd:10:55:59  *** DISCONNECTED: W2JUP
```

CONVerse (K for short) — Immediate Command
Mode: All — Host: Not Supported

CONVERSE is an immediate command that causes the PK-232 to switch from the Command Mode into the Converse Mode. The letter "K" may also be used.

Once the PK-232 is in the Converse Mode, all characters typed from the keyboard are processed and transmitted by your radio. To return the PK-232 to the Command Mode, type the Command Mode entry character (default is <CTRL-C>).

CPactime ON|OFF — Default: OFF
Mode: Packet — Host: CI

Parameters:

ON - Packet transmit timer IS used in Converse Mode.
OFF - Packet transmit timer is NOT used in Converse Mode.

CPACTIME activates automatic, periodic packet transmission in the Converse Mode. When CPACTIME is ON, characters are packetized and transmitted periodically as if in Transparent Mode. Local keyboard editing and display features of the Converse Mode are available. See the PACTIME command for a discussion of how periodic packetizing works.

CRAdd ON|OFF — Default: OFF
Mode: Baudot RTTY — Host: CR

Parameters:

ON - Send <CR CR LF> in Baudot RTTY.
OFF - Send <CR LF> in Baudot RTTY (default).

The CRADD command permits you to set the PK-232's "newline" sequence so that an additional carriage return is ADDed automatically at the end of each typed line.

When CRADD is ON the line-end sequence is <CR><CR><LF>. When CRADD is OFF the line-end sequence is <CR><LF>. The double carriage return is required in some RTTY services such as MARS. CRADD has no effect on received data.

CStatus [Short] — Immediate Command
Mode: Packet — Host: Not Supported

CSTATUS is an immediate command helpful in multiple connections.

When CSTATUS is typed, your monitor displays Link State of all ten logical channels as well as the current input/output channel as follows:

```
NOT CONNECTED TO ANY STATION          CONNECTED TO TWO STATIONS
cmd:cs                                cmd:cs
Ch. 0 - IO DISCONNECTED               Ch. 0 - IO CONNECTED to WX1AAA
Ch. 1 -    DISCONNECTED               Ch. 1 -    CONNECTED to WX1BBB
Ch. 2 -    DISCONNECTED               Ch. 2 -    DISCONNECTED
Ch. 3 -    DISCONNECTED               Ch. 3 -    DISCONNECTED
Ch. 4 -    DISCONNECTED               Ch. 4 -    DISCONNECTED
Ch. 5 -    DISCONNECTED               Ch. 5 -    DISCONNECTED
Ch. 6 -    DISCONNECTED               Ch. 6 -    DISCONNECTED
Ch. 7 -    DISCONNECTED               Ch. 7 -    DISCONNECTED
Ch. 8 -    DISCONNECTED               Ch. 8 -    DISCONNECTED
Ch. 9 -    DISCONNECTED               Ch. 9 -    DISCONNECTED
```

CSTATUS will give a short display if desired. CSTATUS SHORT (or CS S) displays only the current input/output channel or those channels which are connected.

CText text — Default: empty
Mode: Packet — Host: CT

Parameters:

text - Any combination of characters up to a maximum of 120 characters.

CTEXT is the "automatic answer" text sent when CMSG is ON. The message is sent only when another station connects to you. A typical CTEXT message might be:

"I'm not available right now. Please leave a message on my MailDrop."

Clear CTEXT with "%", "&", "NO", "NONE" or "OFF", or simply set CMSG OFF.

CUstom "n" Default: $0A15
Mode: All Host: Cu

Parameters:

"n" - 0 to $FFFF (0 to 65,535 decimal) specifies a four digit hexadecimal value, where each bit controls a different function described below.

The CUSTOM command was originally introduced to allow specialized features for "Custom" applications to be added to the PK-232 without burdening all users with a plethora of commands. As the CUSTOM command is quickly filling up, the command UBIT has been added to replace CUSTOM allow for more features. The CUSTOM command is retained for compatibility, but we recommend using the UBIT command as it is more flexible and easier to use.

For those applications that can not take advantage of the UBIT command, the following CUSTOM features are available in this release of the PK-232 MBX.

Bit 0, position $0001: If bit 0 is set to 1 (default), the PK-232 will discard a received packet if the signal is too weak to light the DCD LED. If set to 0, packets will be received regardless of the Threshold control setting.

Bit 1, position $0002: If bit 1 is set to 0 (default), then setting the MONITOR command to either ON or YES will result in a MONITOR value of 4. If bit 1 is set to 1, then MONITOR ON or YES will force the MONITOR value to 6.

Bit 2, position $0004: If bit 2 is set to 1 (default), a break on the RS-232 line will put the PK-232 into the Command mode (except from Host Mode). If set to 0, a break on the RS-232 line will not affect the PK-232.

Bit 3, position $0008: If bit 3 is set to 0 (default), packet channel numbers will be numbered from 0-9. If bit 3 is set to one, then packet channel numbers are labeled A-J or a-j.

Bit 4, position $0010: This bit affects only Baudot transmit. If bit 4 is set to 1 (default), the PK-232 inserts the FIGS character after a space, just prior to sending any figures, <space><FIGS><number>. This permits any receiving station to correctly decode groups of figures regardless of the USOS setting. If bit 4 is set to 0, the PK-232 will NOT insert FIGS characters after each space. MARS operators may want to set this bit to 0 for literal operation.

Bit 5, position $0020: If bit 5 is set to 0, (default) the PK-232 will always power up in the Command mode. If bit 5 is set to 1, then the PK-232 will remain in the previous mode, i.e., converse, command, or transparent Mode.

Bit 6, position $0040: If bit 6 is set to 0, (default), then monitoring is disabled in the Transparent mode. If bit 6 is set to 1, then monitoring is active in the transparent mode. MFROM, MTO, MRPT, MONITOR, MCON, MPROTO, MSTAMP, CONSTAMP, and MBX are all active.

Bit 7, position $0080: If bit 7 is set to 0 (default), the PK-232 prints the ..-- Morse character as ^. If bit 7 is set to 1, the PK-232 decodes ..-- as a carriage return.

Bit 8, position $0100: If bit 8 is set to 0 (default), MORSE will configure the PK-232 filters for CW as before. If bit 8 is set to 1, MORSE configures the filters for FSK (two-tone) operation, in both receive and transmit. WIDESHFT, RXREV and TXREV are active.

Bit 9, position $0200: Bit position 9 does for AMTOR what WRU does for Baudot and ASCII. If bit 9 is set to 1 (default), a FIGS-D in ARQ causes the unit to become the ISS, transmit the AAB string, then revert back to the IRS. If bit 9 is set to 0, then a received FIGS-D will have no effect.

Bit 10, position $0400: If bit 10 is set to 0 (default), then host polling is as before. If bit 10 is set to 1, then any change in status (e.g. Idle to Tfc) in AMTOR, FAX, TDM or NAVTEX causes the PK-232 to issue the following host block:

SOH $50 n ETB

where n is $30-36, the same number that the OPMODE command furnishes. This block is subject to HPOLL.

Bit 11, position $0800: If bit 11 is set to 1 (default), a connected message appears when an ARQ link is first established using seven-character SELCALLs (CCIR 625). If bit 11 is set to 0, no connected message appears at the beginning of ARQ communications.

Bit 12, position $1000: If bit 12 is set to 0 (default), the Packet Morse ID (MID) is on/off keying of the low tone. If bit 12 is set to 1, the Morse ID is sent in 2-tone FSK with the low tone being key-down and the high tone representing key-up. Use this setting to keep other stations from sending a packet during the Morse ID.

Bit 13, position $2000: If bit 13 is set to 0 (default), MailDrop connect status messages are always sent to the local user, regardless of the setting of MDMON. If bit 13 is set to 1, remote user dialog and connect status messages with the MailDrop are shown only if MDMON is ON.

Bit 14, position $4000: If bit 14 is set to 0 (default), the transmit buffer for data sent from the computer to the PK-232 in packet mode is limited only by available PK-232 memory. If bit 14 is set to 1, the serial flow control will permit only a maximum of 7 I-frames to be held by the PK-232 before transmission. This solves a problem with the YAPP binary file transfer program which relies on a small TNC transmit buffer to operate correctly.

Bit 15 is unused at the present time. To return CUSTOM to the default setting, type CU Y or CU ON at the command prompt.

CWid "n" Default: $06 <CTRL-F>
Mode: Baudot/ASCII RTTY/AMTOR/FAX Host: CW

Parameters:

The CWID command lets you change the "send CWID" control character typed at the end of your Baudot and ASCII RTTY dialogue.

When the PK-232 reads this character embedded in the text or keyboard input, it switches modes and sends your call sign in Morse code, at the keying speed set by MSPEED. As soon as your call sign has been sent in Morse, the PK-232 turns off your transmitter and returns to receive.

DAYStamp ON|OFF Default: OFF
Mode: All Host: DS

Parameters:

ON - The DATE is included in CONSTAMP and MSTAMP.
OFF - Only the TIME is included in CONSTAMP and MSTAMP.

DAYSTAMP activates the date in CONSTAMP and MSTAMP. Set DAYSTAMP ON when you want a dated record of packet channel activity, or when you're unavailable for local packet operation.

DAytime date & time Default: none
Mode: All Host: DA

Parameters:

date & time - Current DATE and TIME to set.

DAYTIME sets the PK-232's internal clock current date and time. The date & time is used in many modes and should be set when the PK-232 is powered up.

The clock is not set when the PK-232 is turned on. The DAYTIME command displays the "?clock not set" error message until it is set as follows:

yymmddhhmm[ss] (spaces and punctuation are allowed)

Example: cmd:daytime 9003090659

where:

yy is the last two digits of the year
mm is the two-digit month code (01-12)
dd is date (01-31)
hh is the hour (00-23)
mm is the minutes after the hour (00-59)
[ss] is the optional seconds

o Optionally the Dallas Semiconductor DS-1216C SmartWatch may be added to the PK-232. To install this IC carefully remove the 32K RAM IC and install the SmartWatch in the RAM socket. Then re-install the RAM IC in the socket provided by the SmartWatch.

DCdconn ON|OFF — Default: OFF
Mode: Packet/AMTOR KISS and RAWHDLC — Host: DC

Parameters:

ON - RS-232 cable Pin 8 follows the state of the CON (or DCD) LED.
OFF - RS-232 cable Pin 8 is permanently set high (default).

DCDCONN defines how the DCD (Data Carrier Detect) signal affects pin 8 in the RS-232 interface to your computer or terminal. Some programs such as PBBS software require that DCDCONN be ON.

DCDCONN also works in the RAWHDLC and KISS Modes. In RAWHDLC and KISS Modes, no packet connections are known to the PK-232. When DCDCONN is ON, the state of the radio DCD is sent to the RS-232 DCD pin (pin-8). This may be necessary to some host applications that need to know when the radio channel is busy.

DELete ON|OFF — Default: OFF
Mode: All — Host: DL

Parameters:

ON - The <DELETE> ($7F) key is used for editing your typing.
OFF - The <BACKSPACE> ($08) key is used for editing your typing.

Use the DELETE command to select the key to use for deleting while editing.

Set DELETE OFF (default) if you wish to use the <Backspace> key to edit typing mistakes. Set DELETE ON if you wish to use the <Delete> key to edit mistakes.

See the BKONDEL command controls how the PK-232 indicates deletion.

DFrom all,none,yes/no call1[,call2..] Default: all
Mode: Packet Host: DF

Parameters:

call - all, none, YES list, NO list.
list of up to eight call signs, separated by commas.

DFROM determines how your PK-232 responds to stations trying to use your station as a digipeater. DFROM is set to "all" when you first start your PK-232. Type DFROM to display the ALL/NONE/YES_list/NO_list status of station's call signs whose packets will or will not be repeated.

To prevent all stations from digipeating through your station, type DFROM NONE.

To permit one or more specific stations to digipeat through your station, type DFROM YES (followed by a list of calls signs). Packets will be digipeated only from stations whose call signs are listed.

To prevent one or more specific stations to digipeat through your station, type DFROM NO (followed by a list of call signs). Packets will not be digipeated from stations whose call signs are listed.

Clear DFROM with "%" "&" or "OFF" as arguments.

DIDdle: ON|OFF Default: OFF
Mode: Baudot, ASCII Host: DD

Parameters:

ON - In Baudot, the PK-232 will send the LTRS character when idling.
In ASCII, the PK-232 sends the NULL (00) character.
OFF - No characters are sent when idling in transmit.

In the RTTY modes, it may be desirable to continue sending some data while paused at the keyboard. With DIDDLE on, the PK-232 will send idle characters when waiting for keyboard entry.

Disconne Immediate Command
Mode: Packet Host: DI

DISCONNE is an immediate command that initiates a disconnect command to the distant station to which you are connected. If your disconnect command is successful, your monitor will display:

*** DISCONNECTED: (call sign)

Other commands can be entered while a disconnect is in progress.
New connections are not allowed until the disconnect is completed.

o If another disconnect command is entered while your PK-232 is trying to disconnect, your PK-232 will instantly switch to the disconnected state.

```
DISPlay [class]                                        Immediate Command
Mode: Command                                          Host: Not Supported
                                  Parameters:
```

```
class -   Optional parameter identifier, one of the following:
               (A)sync       display asynchronous port parameters
               (B)BS         display AMTOR and Packet MailDrop parameters
               (C)haracter   display special characters
               (F)ax         display Facsimile parameters
               (I)d          display ID parameters
               (L)ink        display link parameters
               (M)onitor     display monitor parameters
               (R)TTY        display RTTY parameters
               (T)iming      display timing parameters
               (Z)           display the entire command/parameter list
```

DISPLAY is an immediate command. When DISPLAY is typed without a parameter, the PK-232 responds with a short list of often used parameters.

```
(See also DISPLAY A,B,C,F,I,L,M,R,T,Z)
Connect   Link state is: DISCONNECTED
Opmode    PAcket
FRack     5 (5 sec.)
HBaud     1200
MAXframe  4
Monitor   4 (UA DM C D I UI)
MYcall    PK232
MYSelcal  none
PACLen    128
RBaud     45
TXdelay   30 (300 msec.)
Vhf       ON
WIdeshft  OFF
```

You can display subgroups of related system parameters by specifying the optional class parameter. For example, to display the AMTOR and Packet MailDrop parameters type:

```
disp b
3Rdparty  OFF
FREe      18340
KILONFWD  ON
LAstmsg   0
MAildrop  OFF
MDMon     OFF
MDPrompt  Subject:/Enter message, ^Z (CTRL-Z) or /EX to end
MMsg      OFF
MTExt     Welcome to my AEA PK-232M maildrop.
Type H for help.
MYMail    none
TMail     OFF
TMPrompt  GA subj/GA msg, '/EX' to end.
```

Command names are shown with UPPER-CASE letters indicating the minimum number of characters required for the command. The lower-case letters indicate the (optional) rest of the command name.

```
cmd:disp b
3Rdparty  OFF
FREe      18480
KILONFWD  ON
MAildrop  OFF
MDMon     OFF
MDPrompt  Subject:/Enter message, ^Z (CTRL-Z) or /EX to end
MMsg      OFF
MTExt     Welcome to my AEA PK-232M maildrop.
Type H for help.
MYMail    none
```

Command names are shown with UPPER-CASE letters indicating the minimum number of characters required for the command. The lower-case letters indicate the (optional) rest of the command name.

DWait "n" — Default: 16 (160 msec.)
Mode: Packet — Host: DW

Parameters:

"n" - 0 to 250 specifies wait time in ten-millisecond intervals.

Unless the PK-232 is waiting to transmit digipeated packets, DWAIT forces your PK-232 to pause DWAIT x 10 mSec after last hearing data on the channel, before it begins its transmitter keyup sequence.

DWAIT is an older way collisions with digipeated packets were avoided. These days the P-PERSISTENT method is generally used. When the PPERSIST command is ON (default) the DWAIT timer is ignored.

EAS ON|OFF — Default: OFF
Mode: Baudot, ASCII, AMTOR and MORSE — Host: EA

Parameters:

ON - Echo characters when actually sent on the air by the PK-232.
OFF - Echo characters when sent to the PK-232 by the computer.

The ECHO-AS-SENT (EAS) command functions in all modes except packet. EAS lets you to choose the way data is displayed on your monitor screen or printer. To display your typing exactly as you are typing the keyboard characters or sending from a disk file, set EAS "OFF" (default). To see the actual data being sent from your PK-232 to your radio and transmitted on the air, set EAS "ON".

When EAS is ON in Morse and Baudot RTTY, you'll see only UPPER CASE characters on your screen - the data actually transmitted to the distant station.

If EAS is ON in AMTOR Mode A (ARQ), you'll see characters echoed on your screen only after the distant station has validated (Ack'd) your block of three characters. For Packet the MXMIT command should be used.

Nulls ($00) are not echoed, including the nulls produced by DIDDLE ON in ASCII.

Echo ON|OFF — Default: ON
Mode: All — Host: EC

Parameters:

ON - Characters received from the terminal ARE echoed by the PK-232.
OFF - Characters are NOT echoed.

The ECHO command controls local echoing by the PK-232 when in Command or Converse Mode. Local echoing is disabled in Transparent Mode.

- Set ECHO ON (default) if you don't see your typing appear on your display.
- Set ECHO OFF if you see each character you type doubled.

ECHO is set correctly when you see the characters you type displayed correctly.

ERrchar "n" — Default: $5F (_)
Mode: AMTOR, Morse, NAVTEX and TDM — Host: ER

Parameters:

"n" - A hexadecimal value from $00-$7F used to denote the error character used by the PK-232 for Morse, ARQ, FEC, NAVTEX and TDM.

n is a hex value $00-7F, default $5F (underscore). This is the character that the PK-232 displays when it receives a mutilated character in Morse, ARQ, FEC, NAVTEX or TDM. The user may wish to set this character to $2A (asterisk), $07 (bell), $20 (space) or $00 (null). ERRCHAR ON or ER Y restores the default.

EScape ON|OFF — Default: OFF
Mode: All — Host: ES

Parameters:

ON - The <ESCAPE> character ($1B) is output as "$" ($24).
OFF - The <ESCAPE> character is output as <ESCAPE> ($1B) (default).

The ESCAPE command selects the character to be output when an <ESCAPE> character is to be sent to the terminal. The ESCAPE character selection is provided because some computers and terminals interpret the <ESCAPE> character as a special command. Set ESCAPE ON if you have an <ESCAPE> sensitive terminal to avoid unexpected results from accidentally receiving this character.

FAx — Immediate Command
Mode: Command — Host: FA

FAX is an immediate command that switches your PK-232 into the facsimile mode. The FAX mode is available only if the maildrop (or FREE command) shows at least 3742 bytes free. You must kill MailDrop messages until the number reaches this level if you wish to operate FAX.

FAXNeg ON|OFF — Default: OFF
Mode: FAX — Host: FN

Parameters:

ON - The white and black senses are reversed
OFF - The white and black senses are normal

One might use FAXNEG ON when receiving an image consisting mostly of black, as in a satellite photo. In this case it might help to save your printer ribbon, as well as accentuating features such as cloud cover.

FAXNEG ON is NOT the same as RXREV ON. RXREV reverses the entire signal, including the sync pulses. FAXNEG keeps the sync pulses so that they can be recognized, but reverses the image data.

FEc — Immediate Command
Mode: AMTOR Mode B — Host: FE

FEC is an immediate command that starts an AMTOR FEC (Mode B) transmission. Use FEC for CQ calls in AMTOR. Be sure to include your SELCALL and MYIDENT code in your CQ message so that the distant station can call you back in ARQ.

FEC is necessary for all round table AMTOR contacts. When operating in FEC, let your PK-232 begin each transmission with three to five seconds of idling. The RTTY practice of transmitting a line of RYRYRY is unnecessary on FEC.

You can signify the end of your FEC transmission by typing the changeover sign "+?," internationally recognized as the RTTY equivalent of "KKK." However, in FEC, "+?" is not a software command. You still have to un-key your transmitter (with the RECEIVE or CWID characters or the RCVE command) as you would in RTTY.

Flow ON|OFF — Default: ON
Mode: All — Host: FL

Parameters:

ON - Type-in flow control IS active.
OFF - Type-in flow control is NOT active.

When FLOW is ON (default), any character typed on your keyboard causes output from the PK-232 to the terminal to stop until any of the following occurs:

- A packet is sent (in Converse Mode)
- A line is completed (in Command Mode)
- The packet length (See PACLEN) is exceeded
- The current packet or command line is canceled
- The redisplay-line character is typed
- The logical packet channel is changed

Setting FLOW ON prevents received data from interfering with your keyboard data entry. When FLOW is OFF, data is sent to the terminal whenever it is available.

FRack "In" Default: 5 (5 sec.)
Mode: Packet Host: FR

Parameters:

"n" — 1 to 15, specifying FRame ACKnowledgment timeout in 1 second intervals.

FRACK is the FRame Acknowledgment time in seconds that your PK-232 will wait for acknowledgment of a sent protocol frame before "retrying" that frame.

After sending a packet requiring acknowledgment, the PK-232 waits for FRACK seconds before incrementing the retry counter and sending another frame. If the packet address includes any digipeaters, the time between retries is adjusted to:

Retry interval (in seconds) = "n" x (2 x m + 1)
(where m is the number of intermediate relay stations.)

When a packet is retried, a random wait time is added to any other wait times. This avoids lockups where two packet stations repeatedly collide with each other.

FREe Immediate Command
Mode: All Host: FZ

Typing "FREE" displays the number of usable bytes left in the MailDrop, as in "FREE 3724." This may be useful to a Host mode application using the MailDrop.

FRIck "n/n" Default: 0/0 (0 sec.)
Mode: Packet Host: FF

Parameters:

"n" — 0 to 250, specifying the Frame Acknowledgment timeout for Meteor Scatter work in 10 milli-second intervals.

FRICK is a short version of FRACK, meant to be used in packet radio meteor scatter work. If FRICK is 0 (default), the FRACK timer is then in use and the unit operates as before with the retry timer in units of whole seconds. If FRICK is 1 to 250, FRICK overrides FRACK as the unit's retry timer, and the retry timer is in units of 10 msec. up to 2500 mode. (2.5 seconds).

Unlike FRACK, FRICK does not take into account the number of digipeaters in the connect path. FRICK assumes there are no digipeaters being used.

Note: Do not attempt multiple packet connections while FRICK is active (1-250). In contrast to FRACK, which provides one retry timer per multi-connect channel, there is only one FRICK timer in the PK-232. Each logical channel will try to use the same FRICK timer, causing interference to the operation of the other channels.

Due to the sporadic nature of meteor scatter work, a Master/Slave mode can be enabled in the PK-232 with User BIT 18 (UBIT 18). When UBIT IS OFF, Frame Acknowledge operation is as in previous firmware versions.

When UBIT 18 is ON, a master/slave relationship is established in packet radio connections. This is done to reduce the possibility of simultaneous transmissions by both sides of a packet connection. In this mode, the master station sends either an I-Frame or a polling frame upon the expiration of FRICK (or FRACK if FRICK = 0). The FRICK or FRACK timer then starts counting again. The master station therefore sends packets constantly, even if all its I-frames have been acknowledged. The slave station sends nothing, not even I-frames, until it receives a polling frame from the master. A station becomes the master upon its transmission of a SABM (connect) frame; a station becomes the slave upon its transmission of a UA (acknowledgement of the SABM) frame.

Recommended settings for this method of meteor scatter work (both stations should use these settings):

UBIT IS ON
RETRY 0
AX25L2V2 ON (default)
MLXFRAME 1
(CHECK doesn't matter)
FRICK n, where n is large enough to allow the other station time to send the start of an acknowledgement frame

Note; This is an experimental mode and we welcome any comments or suggestions you might have. Please make them in writing and direct them to the Timewave Engineering Department. Thank You.

FSpeed "n" Default: 2 (120)
Mode: FAX Host: FS

Parameters:

"n" — 0 to 4 selects the FAX horizontal scan rate from the table below:

1:	1 line/Second	60 lines/Minute
2:	2 lines/Second	120 lines/Minute
3:	3 lines/Second	180 lines/Minute
4:	4 lines/Second	240 lines/Minute
0:	1.5 lines/Second	90 lines/Minute

You can tell the scan rate by listening to the signal. Most weather charts are transmitted at 2 lines/Second (default), or 120 lines/Minute. Some facsimile photographs and Japanese news are sent at 60 lines/minute.

With wide-carriage printers, the maximum print densities are reduced. Here are the maximum print densities at various scan speeds and carriage widths:

FSPEED	(LPM)	Standard carriage	Wide carriage
0	90	183 dpi	113 dpi
1	60	275 dpi	169 dpi
2	120	138 dpi	85 dpi
3	150	92 dpi	56 dpi
4	240	69 dpi	42 dpi

FUlldup ON/OFF Default: OFF
Mode: Packet Host: FU

Parameters:

ON - Full duplex mode is ENABLED.
OFF - Full duplex mode is DISABLED.

When full-duplex mode is OFF (default), the PX-232 makes use of the DCD (Data Carrier Detect) signal from its modem to avoid collisions.

When full-duplex mode is ON the PK-232 ignores the DCD signal and acknowledges packets individually.

Full-duplex operation is useful for full-duplex radio operation, such as through OSCAR satellites. It should not be used unless both your station and the distant station can operate in full-duplex.

Graphics "n" Default: 1 (960 dots)
Mode: FAX Host: GR

Parameters:

"n" 0 to 6 selects the FAX horizontal graphics dot density printed on the printer from the table below

GRAPHICS determines the horizontal print density of the parallel Printer. The GRAPHICS dot densities for each PRTYPE will be given with the PRTYPE command. Graphics dot-densities as a function of PRTYPE are shown below.

Density in dote/inch (dpi) as a function of GRAPHICS and PRTYPE

	GRAPHICS						
PRTYPE	0	1	2	3	4	5	6
0-3	60	120	120	240	50	72	90
4-7	60	120	120	240	50	72	90
8-9	60	120	144	200	80	72	90
12-19	136	240	144	160	50	72	96
20-21	60	60	60	60	60	72	100
24-27	60	120	144	240	60	72	
28-29	60	120					
32-35	60	120	120	240	80	72	90
36	60	60	60	60	60	60	60
40-43	60	120	120	120	60	72	144
44-47	72	144	144	72	72	72	72
48-51	50	160	80	50	50	80	80

In using the various GRAPHICS densities above, the user should be aware that not all the combinations or parameters work, especially with the slower printers (100 CPS or less). For example, a combination of PRTYPE 2, FSPEED 4, GP.APHICS I and ASPECT 4 would require the printer to print a pattern of 8 dots by 960 every 3 seconds which would mean trouble for a 100 CPS printer. On the other hand, a combination of PRTYPE 2, FSPEED 2, GRAPHICS 0 and ASPECT 2 would work, as it results in a pattern of dots 8 by 480 every 12 seconds. We know the following combinations of dot densities and FSPEED cause trouble.

	FSPEED, 8" width (narrow)					FSPEED 13" width (wide)				
Dot Density	0	1	2	3	4	0	1	2	3	4
60 dpi										
72 dpi										s
80 dpi										x
90 dpi										x
96 dpi									s	x
100 dpi									s	x
120 dpi					s				x	x
136 dpi					x				x	x
144 dpi					x			s	x	x
160 dpi				s	x	x	x	x	x	x
200 dpi				x	x	x	x	x	x	x
240 dpi			s	x	x	x	x	x	x	x

HBaud "n" — Default: 1200 bauds
Mode: Packet — Host: HB

Parameters:

"n" - values specifying the data rate in bauds from the PK-232 to the radio.

HBAUD sets the radio ("on-air") baud rate only in the Packet operating mode. HBAUD has no relationship to your computer terminal program's baud rate. Available HDLC packet data rates "n" include 45, 50, 57, 75, 100, 110, 150, 200, 300, 400, 600, 1200, 2400, 4800 and 9600 bauds. Internal modems are provided for 45 - 1200 bauds. At higher data rates, an external modem must be used.

HEAderln ON|OFF — Default: ON
Mode: Packet — Host: HD

Parameters:

ON - The header in a monitored packet is printed on a separate line from the text.
OFF - The header and text of monitored packets are printed on the same line.

When HEADERLN is ON (default), the address is shown, followed by a <CR><LF> that puts the packet text on a separate line as shown below:

```
WX1AAA>WX2BBB:
Go ahead and transfer the file.
```

HEADERLN affects the display of monitored packets. When HEADERLN is OFF, the address information is shown on the same line as the packet text as shown below:

```
WX1AAA>WX2BBB: Go ahead and transfer the file.
```

Help — Immediate Command
Mode: Command — Host: Not Supported

While in Command Mode, type the command "H" to read the abbreviated on-line HELP file. Your monitor displays the following brief list:

```
Help:
AMtor     PAcket    AScii
ARq       Connect   BAudot
AList     Disconne  MOrse
FEc       MHeard    DISPlay
AChg      CStatus   CALibrat
NAvtex    SIgnal    FAx
TDm       CONVerse  Trans
Xmit      Rcve      Lock
RESTART   RESET
MDCheck   TClear
```

You can enter Command Mode at any time to list the HELP text.

HEReis "n" — Default: $02 <CTRL-B>
Mode: Baudot, ASCII and AMTOR — Host: HR

Parameters:

"n" - Is the hex representation ($01-$7F) of the character that causes the AAB string to be sent in the middle of transmitted text.

If you wish to send your own AAB string for identification during a transmission simply enter the HEREIS character (default <CTRL-B>). Also see the command AAB.

HId ON|OFF — Default: OFF
Mode: Packet — Host: HI

Parameters:

ON - Your PK-232 sends HDLC identification as a digipeater.
OFF - Your PK-232 does not send HDLC identification.

Set HID ON to force your PK-232 to send an ID packet every 9.5 minutes when it's being used as a digipeater. Otherwise leave HID OFF (default).

This identification consists of a UI-frame with your station identification (MYCALL) and MYALIAS in the data field. The packet is addressed to "ID".

NOTE: You cannot change the 9.5-minute automatic interval timing.

HOMebbs call — Default: (none)
Mode: Packet/MailDrop — Host: HM

Parameters:

call - Call Sign of your HOME BBS with which you have made prior arrangements to Auto-Forward.

This is the Call Sign of your local or HOME BBS that you will use for Reverse Forwarding messages. You must make special arrangements with the system operator of this BBS to set you up for Reverse Forwarding. The SSID is not compared when matching HOMEBBS to the source call sign of an incoming packet.

HOST "n" — Default: 0
Mode: All — Host: HO

Parameters:

"n" - A hexadecimal value from $00 through $FF setting bits from the table below that define the Host operation of the PK-232.

The HOST command enables the "computer-friendly" HOST communications mode, over the PK-232's RS-232 link. To cancel HOST mode, send 3-<CTRL-C> characters as if exiting the Transparent mode, or type <CTRL-A> O H O N <CTRL-W>. Sending a Break signal will not cause the PK-232 to exit from the HOST mode.

Bit 0: Controls whether the HOST mode is ON or OFF.

If bit 0 is equal to 0, HOST is OFF.

If bit 0 is equal to 1, HOST is ON.

Bit 1: Controls the local MailDrop access.

If bit 1 is equal to 0, then the Maildrop Send data uses the $20 block. Read data uses the the $2F block as before. Monitored MXMIT data uses the $3F (monitored receive) block type.

If bit 1 is equal to 1, then the MailDrop send data uses the $60 block type. Read data uses the $70 block type. Monitored MXMIT data uses the $2F (echoed) block type to differentiate between monitored transmitted and received frames.

Bit 2: Controls the DSP-2232's extended HOST Mode.

Bits 3-7 are reserved for future use.

To maintain backward compatibility with older programs written to use the ON/OFF form of the HOST command, HOST ON is equivalent to HOST $01 described above. However programmers must note that HOST now returns a numeric value and not ON or OFF as before.

See Timewave's PK-232 Technical Manual for full information on Host Mode.

HPoll ON|OFF — Default: ON
Mode: Host — Host: HP

Parameters:

ON - The HOST Mode program must poll the PK-232 for all data (default).
OFF - The HOST Mode program must accept data from the PK-232 at anytime.

When HPOLL is ON (default) the HOST Mode program must poll the PK-232 (using the <CTRL-A> O G G <CTRL-W>) for all data that might be available to be displayed to the screen. When HPOLL is OFF, the HOST Mode program must be able to accept any data from the PK-232 whenever it becomes available.

Id — Immediate Command
Mode: AMTOR/ASCII/Baudot/Packet — Host: ID

In AMTOR, the ID command acts like the RCVE command, only adding a Morse ID before going back to receive. In ASCII and Baudot, the ID command causes a CW ID to be sent much like an immediate version of the CWID character (CTRL-F). Because the ID command is immediate, the message "Transmit Data Remaining" will be displayed if any unsent data remains in the transmit buffer.

In Packet, ID is an immediate command that sends a special identification packet. The ID command allows you to send a final identification packet when you're taking your station off the air. HID must also be set ON. The identification consists of a UI-frame, with its data field containing your MYALIAS (if any) and your MYCALL and the word "digipeater". The ID packet is sent only if your PK-232 has digipeated any transmissions since the last automatic identification.

ILfpack ON|OFF — Default: ON
Mode: Packet — Host: IL

Parameters:

ON - The PK-232 ignores all line-feed characters received from the terminal.
OFF - The PK-232 transmits all line-feeds received from the terminal.

The ILFPACK command permits you to control the way the PK-232 handles line-feed characters received from your computer or terminal while in the Packet mode.

IO ["n"] Default: none
Mode: All Host: IO

Parameters:

"n" - A hexadecimal value used to access the PK-232's memory and I/O locations, or read values stored at a specified ADDRESS.

The IO command works with the ADDRESS command (ADDRESS $aabb) and permits access to memory and I/O locations. Use the IO command without arguments to read an I/O location, and with one argument $0 to $FF to write to an I/O location. The value in ADDRESS is not incremented after using the IO command.

In ADDRESS $aabb, where "aa" (01-FF) is the device address, and "bb" is the register address on the device.

If ADDRESS is set to $00bb, the IO command reads or writes data to the device at I/O address bb. There is no register set-up before the access. This command is used primarily as a programmer's aid and is not needed for normal PK-232 use.

JUstify "n" Immediate Command
Mode: FAX Host: JU

Parameters:

"n" - 0 to 25 specifies the number of half-inches the facsimile image will be moved closer to the edge of the paper.

The number 0-25 is in units of half-inches, or 1/16 of standard (8") paper width. In most cases entering JUSTIFY n will move the image to the left. If LEFTRITE is OFF, then JUSTIFY will move the image to the right.

For example if the left-hand edge of the image is 4-1/2 inches away from the edge of the paper, try entering JUSTIFY 8. This will move the image 4 inches to the left. If this is not enough, you can always enter JUSTIFY 1, which will move the image the additional half-inch to the left.

JUSTIFY should only be needed after a manual start has been issued with the LOCK command in the FAX mode.

KILONFWD ON|OFF Default: ON
Mode: Packet/MailDrop Host: KL

Parameters:

ON - The PK-232 kills messages after they have been Reverse Forwarded.
OFF - The PK-232 does not kill messages after Reverse Forwarding.

Controls the disposition of a message that has been Reverse Forwarded to the station whose call is in HOMEBBS. If KILONFWD is ON (default), the message is killed automatically to make room for other messages. If KILONFWD is OFF, the message's status is changed from "F" to "Y."

KIss "n" Default: 0
Mode: Packet Host: KI

Parameters:

"n" - Is a HEX number from $00 (KISS disabled) through $FF that enables the KISS mode selected from the table below.

The KISS mode must be entered to prepare the PK-232 for KISS operation. TCP/IP and other special applications have been written that require the KISS mode be enabled to operate correctly. For normal AX.25 Packet operation, this command should be left at 0 or OFF (default).

The KISS command, formerly ON/OFF, has now been expanded to a numerical value from $00 - $FF. This expansion supports G8BPQ's multi-drop KISS protocol. The table below describes available KISS options.

KISS $00: KISS disabled (formerly displayed as KISS OFF)
KISS $01: Standard KISS (same as KISS ON or KISS YES)
KISS $03: Extended KISS
KISS $07: Extended KISS + KISS polling enabled
KISS $0B: Extended KISS + KISS checksum enabled
KISS $0F: Extended KISS + KISS polling and checksum enabled

Note that KISS ON enables standard KISS operation for compatibility with existing applications.

Extended KISS mode adds these commands to the standard commands ($x0-$x5):

$xC signifies data to be transmitted. Unlike the $x0 command, the $xC byte is followed by two frame ID bytes, then the data; when the TNC transmits the frame, it notifies the host application by echoing back FEND, the $xC byte, the two frame ID bytes, and FEND.

$xE is the polling command, similar to the HOST "GG" command existing in AEA products. Polling makes multi-TNC KISS operation possible. If KISS polling is enabled, the TNC holds received data until the host application sends the poll command. If the TNC is holding no data, it echoes back FEND $xE FEND. The "x" in "$xE" must match the number in the KISSADDR command for the TNC to respond.

If KISS checksum is enabled, a checksum byte is added to the end (before the final FEND) of all KISS blocks flowing between the TNC and the host application.

The checksum is the exclusive-OR of all other bytes between the FEND bytes, taken before KISS escape transpositions. A checksum is helpful when using multiple TNCs on a marginal RS-232 link. If the PK-232 receives a KISS block with a bad checksum, it does not transmit the data.

In KISS and Raw HDLC modes, communication activity on the RS-232 link is shown by illuminating the STA and CON LEDs as follows:

Host to TNC Communication: STA LED illuminated.
TNC to host Communication: CON LED illuminated.

HOST OFF (3 <CTRL-C>s) will force KISS OFF. Details on the use of KISS TNC protocol are contained in Timewave's Technical Manual for the PK-232.

KISSAddr "n" Default: 0
Mode: Packet Host: KA

Parameters:

"n" - Is a number from 0-15 signifying the KISS address of the TNC's radio port.

Radio port addressing is available in the high nibble of the KISS command byte. The PK-232 compares the high nibble of the KISS command byte to KISSADDR only if extended KISS mode is enabled. If the command does not match KISSADDR, the TNC takes no action. Exception: the exit-KISS command $FF works no matter what the value of KISSADDR or the status of extended KISS mode.

LAstmsg "n" Immediate Command
Mode: Packet MailDrop Host: LA

Parameters:

"n" - 0 to 999 specifies the message number of the last MailDrop message.

The number 0-999 is the number of the last message sent by a remote user or the SYSOP to the MailDrop. This command is handy for checking the last message sent to your MailDrop system. The LASTMSG command also allows the MailDrop message counter to be set to any value, or simply reset by setting LASTMSG 0.

LEftrite ON|OFF Default: ON
Mode: FAX Host: LR

Parameters:

ON - The FAX signal is scanned from left to right
OFF - The FAX signal is scanned from right to left

Occasionally you may come across FAX images that are obviously backwards. Turning LEFTRITE OFF will reverse the scanning direction.

LIte ON|OFF Default: ON
Mode: Packet Host: LI

Parameters:

ON - The PK-232 will attempt to use the HF Packet Lite extensions.
OFF - The PK-232 uses AX.25 Level 2 Version 1.0 or 2.0 protocol.

A Packet Lite connection is established only if both stations have LITE ON. As with the AX25L2V2 command, LITE may not be changed if the TNC is in a connected state. Setting LITE ON overrides the AX25L2V2 setting, and the unit acts as if AX25L2V2 were ON. See the section of the Packet Chapter (Chapter 4) regarding Packet Lite operation and restrictions.

Lock — Immediate Command
Mode: Morse/Baudot/AMTOR/FAX — Host: LO

AMTOR and Baudot: LOCK is an immediate command used to force a LETTERS shift in the received data. This can be helpful if noise has garbled the LTRS character causing FIGURES to be displayed.

FAX: This is a manual start command for FAX. Normally the transmitting station starts a FAX image with sync pulses so that the receiver automatically lines up with the edge of the paper. If you tune in a signal too late, or there is so much noise that the sync pulses are not detected, you can start reception manually with the LOCK command. If you issue a LOCK to the PK-232, you will probably need to use the JUSTIFY command to properly align the image.

Morse: LOCK is an immediate command that instructs the PK-232 to lock its timing to the current measured speed of a Morse signal. The LOCK command may improve the PK-232's ability to decode CW signals in the presence of high noise levels.

MAildrop ON|OFF — Default: OFF
Mode: Packet — Host: MV

Parameters:

ON - The PK-232MBX operates as a personal packet BBS or MailDrop.
OFF - The PK-232MBX only operates as a normal AX.25 Level 2 TNC (default).

The PK-232's MailDrop is a personal mailbox that uses a subset of the W0RLI/WA7MBL PBBS commands. When your MailDrop is ON, other stations can connect to your PK-232MBX, leave messages for you or read messages from you. Third-party messages are not accepted by your MailDrop unless 3RDPARTY is ON.

See the MDCHECK, MDPROMPT, MDMON, MTEXT, MMSG and MYMAIL commands.

MARsdisp ON|OFF — Default: OFF
Mode: Baudot and AMTOR, RTTY — Host: MW

Parameters:

ON - The PK-232 translates received LTRS characters to a <CTRL-O>, and FIGS characters to a <CTRL-N> and sends these to the terminal.
OFF - The PK-232 operates as before in Baudot and AMTOR (default).

The MARSDISP command permits the Baudot and AMTOR operator to detect and display every character including LTRS and FIGS sent by the other station. The ACRDISP and ALFDISP may be turned off to prevent extraneous carriage-returns and Linefeeds from being sent to the display. If this data is retransmitted, ACRRTTY should be 0, and ALFRTTY should be OFF. The <CTRL-O> and <CTRL-N> characters will send LTRS and FIGS respectively.

MAXframe "n" Default: 4
Mode: Packet Host: MX

Parameters:

"n" - 1 to 7 signifies a number of packet frames.

MAXFRAME limits the number of unacknowledged packets your PK-232 permits on the radio link, and the number of contiguous packets your PK-232 will send in a single transmission.

The "best" value of MAXFRAME depends on your local channel conditions. In most cases of local keyboard operation, the default value of MAXFRAME 4 works well. When the amount of traffic is heavy, the path in use is poor or you are using many digipeaters, you can actually improve your throughput by reducing MAXFRAME. Use MAXFRAME 1 for best results on HF packet.

MBEll ON|OFF Default: OFF
Mode: Packet Host: ME

Parameters:

ON - Will send 3 BELL characters to the terminal when the callsign(s) of the station(s) monitored match the MFROM and MTO lists.
OFF - As is, that is the PK-232 will not send any BELL characters to the terminal due to MONITORED packets.

MBELL can be used to alert the user to the presence of particular packet station(s) on the frequency. For example if you want to be alerted when N7ML comes on frequency you would set the following:

MBELL ON MONITOR 4 MFROM yes N7ML MTO NONE

When MBELL is ON, packets from and to all stations are displayed, but only those packets matching the MFROM and MTO lists cause the bell to ring.

MBx call1[,call2][-"n"][ALL] Default: none
Mode: Packet Host: MB

Parameters:

call - The call signs of one or two stations to be monitored.
"n" - 0 to 15, indicating an optional SSID.

The MBX command permits you to read or record useful or needed data without having to connect or log on to the source station(s).

MBX filters the received packet data so that only packets from the selected station(s) are shown, without headers or repeated frames. MBX overrides normal monitor functions and can show one or both sides of a conversation.
The operation of MBX command is as follows:

MBX NONE (Default) All monitored frames are shown with their headers.

MBX ALL Only the data fields in the I-frames and UI frames are shown. Data from retried frames will be shown each time such a frame is monitored. The MFROM and MTO commands are active.

MBX CALL 1 Only the data in the I and UI frames to or from CALL 1 are shown.

CALL 1 can be either the source or destination station. Retried frames are not shown. The MFROM and MTO commands are ignored.

MBX CALL 1, CALL 2 Only the data in the I and UI frames are shown when CALL 1 is the source and CALL 2 is the destination or vice-versa. Retried frames are not shown. The MFROM and MTO commands are ignored.

A packet connection on any channel inhibits monitoring, if MBX is not set to "none". MCON will only work if MBX is set to "none".
Clear MBX with "%" "&" "N" "NO" "NONE" or "OFF" as arguments.

MCon "n" Default: 0 (none)
Mode: Packet Host: MC

Parameters:

"n" - 0 to 6 signifies various levels of monitor indications

Use MCON for selective monitoring of other packet traffic while connected to a distant station. MCON works in similar fashion to MONITOR, but affects your display only while you are connected to another station.

If MCON is set to a value between "1" and "5," frames meant for you are displayed as though monitoring was OFF. You'll see only the data. If MCON is set to "6," frames meant for you are displayed as any other monitored frame. The headers appear together with the data.

The meanings of the parameter values are:

0 Monitoring while connected is disabled.

1 Only unnumbered (UI) frames resulting from an unconnected transmission are displayed. Use this for an "unproto," roundtable type QSO. This setting

also display beacons.

2 Numbered (I) frames are also displayed. Use this to monitor connected conversations in progress.

3 Connect request (SABM or "C") frames and disconnect (DISC or "D") frames are also displayed with the headers.

4 Unnumbered acknowledgment (UA) of connect- and disconnect-state frames are also displayed with either the characters "UA" or "DM" and a header.

5 Receive Ready (RR), Receive Not Ready (RNR), Reject (RJ), Frame Reject (FRMR) and (I)-Frames are also displayed.

6 Poll/Final bit, PID and sequence numbers are also displayed.

MDCheck — Immediate Command
Mode: AMTOR Packet/MailDrop — Host: M1

MDCHECK is an immediate command which allows you to log on to your own MailDrop. After logging on, you can EDIT, LIST, READ, SEND or KILL MailDrop messages.

To use the MDCHECK command, and your PK-232 must not be connected to or linked to any packet or AMTOR stations. For monitoring purposes, local access of the MailDrop is considered a connection. Type "B" (BYE) to quit local control of your MailDrop.

MDigi ON|OFF — Default: OFF
Mode: Packet — Host: MD

Parameters:

ON - I and UI frames having your call sign (MYCALL or MYALIAS) as the next digipeater in the field are displayed, regardless of connected status.
OFF - Normal monitoring as determined by the monitoring mode commands.

MDIGI permits you to display packets when another station uses your station as a digipeater. If you want to monitor ALL traffic that flows through your packet station, set MDIGI ON.

You may not want to see all the data passing through your station, especially if many others use you as a digipeater. In this case set MDIGI OFF (default).

MDMon ON|OFF — Default: OFF
Mode: AMTOR and Packet/MailDrop — Host: Mm

Parameters:

ON - Monitor a calling station's activity on your MailDrop.
OFF - Normal monitoring as determined by the monitoring mode commands.

Set MDMON to ON to monitor activity on your MailDrop.

MDMON permits you to monitor activity on your AMTOR or packet MailDrop showing you both sides of the QSO. Packet headers are not shown while a caller is logged on. When no one is connected to your MailDrop, channel activity is monitored according to the setting of MONITOR.

Set MDMON OFF to cancel MailDrop monitoring. Note that MailDrop connect and link status messages will be displayed even with MDMON OFF. These status messages are important and allow you to see who is connected to your MailDrop. They can be disabled however with the UBIT 13 command. See the UBIT command for more information .

MDPrompt text — Default: (see text)
Mode: Packet/MailDrop — Host: Mp

Parameters:

text - Any combination of characters and spaces up to a maximum of 80 bytes.

MDPROMPT is the command line sent to a calling station by your MailDrop in response to a Send message command. The default text is:

"Subject:/Enter message, ^Z (CTRL-Z) or /EX to end"

Text before the first slash is sent to the user as the subject prompt; text after the slash is sent as the message text prompt. If there is no slash in the text, the subject prompt is "Subject:" and the text prompt is from MDPROMPT.

MEmory "n" — Default: none
Mode: All — Host: MM

Parameters:

"n" - A hexadecimal value used to access the PK-232's memory locations, or read values stored at a specified ADDRESS.

The MEMORY command works with the ADDRESS command (ADDRESS $aabb) and permits access to memory locations. Use the Memory command without arguments to read a memory, and with one argument $0 to $FF to write to a memory location. The value in ADDRESS is incremented after using the MEMORY command.

MFIlter n1[,n2[,n3[,n4]]] — Default: $80
Mode: Morse, Baudot ASCII, AMTOR and Packet — Host: MI

Parameters:

"n" - 0 to $80 (0 to 128 decimal) specifies an ASCII character code. Up to four characters may be specified separated by commas.

Use MFILTER to select up to 4 characters to be "filtered," or excluded from Morse, Baudot, ASCII, AMTOR and monitored packets. Parameters "n1," - "n4" are the ASCII codes for the characters you want to filter. The special value of $80 (default) filters all characters above $7F and all control-characters except carriage-return ($0D), linefeed ($0A), and TAB ($09).

MFrom ALL/NONE or YES/NO call1[,call2..] — Default: ALL
Mode: Packet — Host: MF

Parameters:

call - ALL/NONE or YES_list/NO_list (list of up to eight call signs, separated by commas).

MFROM determines what packets are monitored. To monitor all packets, set MFROM to ALL. To stop any packets from being displayed, set MFROM and MTO to NONE.

To display packets from one or more specific stations, type MFROM YES followed by a list of call signs you WANT to monitor packets from. To hide packets from one or more specific stations, type MFROM NO followed by a list of call signs you want NOT to monitor packets from. When using MFROM, set MTO to NONE.

You can include optional SSIDs specified as "-n" after the call sign. If MFROM is set to "NO N6IA," any combination N6IA-0,...N6IA-15 will NOT be monitored. If MFROM is set to "YES N6IA-1," then only N6IA-1 will be monitored.
When MFROM and MTO contain different arguments, the following priority applies:

1. ALL, 2. NO_list, 3. YES_list, 4. NONE

Clear MFROM with "%" "&" or "OFF" as arguments.

MHeard — Immediate Command
Mode: Packet/AMTOR MailDrop — Host: MH

MHEARD is an immediate command that displays a list of up to 18 most recently heard stations. Stations that are heard directly are marked with a * in the heard log. Stations that have been repeated by a digipeater are not marked.

When DAYTIME has been set, entries in the heard log are time stamped. When DAYSTAMP is ON the date is also shown. An example of the MHEARD display is shown below:

```
DAYSTAMP ON                          DAYSTAMP OFF
05-Jul-86  21:42:27  WA1FJW          21:42:27  WA1FJW
05-Jul-86  21:42:24  WA1IXU*         21:42:24  WA1IXU*
```

Clear the MHEARD list with a "%", "&", "N," "NO," "NONE" or "OFF" as arguments.

MId "n" — Default: 0 (00 sec.)
Mode: Packet — Host: Mi

Parameters:

"n" - 0 - 250 specifies the morse ID timing in units of 10 second intervals. 0 (zero) disables this function.

If "n" is set to some value from 1 to 250, the PK-232 will periodically issue a 20 wpm Morse ID. For example, an MID of 177 would cause a Morse ID every 1,770 seconds (29.5 minutes). A Morse ID will only be transmitted if a packet was sent since the last Morse ID. The Morse ID uses TXDELAY, PPERSIST, and DCD.

If MID is set to a value other than 0, ID will force a Morse ID immediately. If both HID and MID are active, the Morse ID will be sent first.

MID normally sends a Morse ID using on/off keying of the low tone. If FSK keying of both tones is desired to prevent stations from transmitting over your Morse ID, see the UBIT 12 command.

MMsg ON|OFF — Default: OFF
Mode: Packet/AMTOR MailDrop — Host: MU

Parameters:

ON - The stored MTEXT message is sent as the first response after an AMTOR link or Packet connect to the MailDrop is established.
OFF - The MTEXT message is not sent at all.

MMSG enables or disables automatic transmission of the MTEXT message when your AMTOR or Packet MailDrop links with another station.

Monitor "n" — Default: 4 (UA DM C D I UI)
Mode: Packet — Host: MN

Parameters:

"n" - 0 to 6 signifies various levels on monitor indications

The Monitor command determines what kind of packets on a channel are displayed when the PK-232 is NOT connected to any other packet stations.

The meanings of the parameter values are:

0 All packet monitoring functions are disabled.

1 Only unnumbered (UI) frames resulting from an unconnected transmission are displayed. Use this for an "unproto," round-table type QSO. This setting also displays beacons.

2 Numbered (I) frames are also displayed. I-frames are numbered in order of generation and result from a connected transmission. Use this to monitor connected conversations in progress.

3 Connect request (SABM or "C") frames and disconnect (DISC or "D") frames are also displayed with the headers.

4 Unnumbered acknowledgment (UA) of connect- and disconnect-state frames are also displayed with either the characters "UA" or "DM" and a header.

5 Receive Ready (RR), Receive Not Ready (RNR), Reject (RJ), Frame Reject (FRMR) and (I)-Frames are also displayed.

6 Poll/Final bit, PID and sequence numbers are also displayed.

MOrse — Immediate Command
Mode: Command — Host: MO

MORSE is an immediate command that switches your PK-232 into the Morse mode.

Unless you change MSPEED, your PK-232 uses the default Morse transmit speed value of 20 WPM.

MProto ON|OFF — Default: OFF
Mode: Packet — Host: MQ

Parameters:

ON - Monitors all I and UI frames as before.
OFF - Monitors only those I and UI frames with a PID byte of $F0.

This is in response to NET/ROM, which sends frames that have a PID of $CF, and that contain Control characters. If you want to monitor every frame including those used by NET/ROM, you must turn MPROTO ON.

MRpt ON|OFF — Default: ON
Mode: Packet — Host: MR

Parameters:

ON - Show digipeater path in the packet header.
OFF - Show only originating and destination stations in the packet header.

MRPT affects the way monitored packets are displayed. When MRPT is ON (default), the call signs of all stations in the digipeat path are displayed. Call signs of stations heard directly are flagged with an asterisk (*) as shown:

```
W2JUP-4*>WA1IXU>W1AW-5>W1AW-4 <I;0,3>:
```

When MRPT is OFF, only the originating station and the destination stations are displayed are displayed in the monitored packet header as shown below:

```
W2JUP-4*>W1AW-4 <I;0,3>:
```

MSPeed "n" — Default: 20 WPM
Mode: Morse — Host: MP

Parameters:

"n" - 5 to 99 signifies your PK-232's Morse transmit speed.

The MSPEED command sets the Morse code keying (transmit) speed for your PK-232. The slowest available Morse code speed is 5 words per minute. When using Morse speeds between 5 and 14 WPM, the transmitted code is sent with Farnsworth spacing at a character speed of 15 words per minute. The spacing between characters is lengthened to produce an overall code rate of 5 to 14 WPM.

MStamp ON|OFF — Default: OFF
Mode: Packet — Host: MS

Parameters:

ON - Monitored frames ARE time stamped.
OFF - Monitored frames ARE NOT time stamped.

The MSTAMP command activates time stamping of monitored packets. When your PK-232's internal software clock is set, date and time information is available for automatic logging of packet activity and other applications. Remember to set the date and time with the DAYTIME command.

When MSTAMP is OFF, the packet header display looks like this:

```
W2JUP-4*>KA2EYW-1>AI2Q <I;2,2>:
```

When MSTAMP is ON and DAYSTAMP is OFF, the display looks like this:

```
22:51:33  W2JUP-4*>KA2EYW-1>AI2Q <I;2,2>:
```

MTExt text — Default: See sample
Mode: AMTOR/Packet MailDrop — Host: Mt

Parameters:

text Any printable message up to a maximum of 120 characters.

MTEXT is the "MailDrop automatic answer" text similar to CTEXT. If MMSG is ON, the MTEXT message is sent when a station links to your AMTOR or Packet MailDrop. The default text is:

"Welcome to my AEA PK-232M maildrop.
Type H for help."

MTEXT can be cleared with a "%", "&", "N," "NO," "NONE" or "OFF" as arguments.

MTo ALL/NONE or YES/NO call1[,call2..] — Default: none
Mode: Packet — Host: MT

Parameters:

call - ALL/NONE or YES_list/NO_list (list of up to eight call signs, separated by commas).

MTO determines what packets are monitored. To monitor all packets, set MTO to ALL. To stop any packets from being displayed, set MTO and MFROM to NONE.

To display packets TO one or more specific stations, type MTO YES followed by a list of call signs you WANT to monitor packets to. To hide packets TO one or more specific stations, type MTO NO followed by a list of call signs you want NOT to monitor packets to. When using MTO, set MFROM to NONE.

You can include optional SSIDs specified as "-n" after the call sign. If MTO is set to "NO N6IA," any combination N6IA-0,...N6IA-15 will NOT be monitored. If MTO is set to "YES N6IA-1," then only N6IA-1 will be monitored.

When MFROM and MTO contain different arguments, the following priority applies:

1. ALL, 2. NO_list, 3. YES_list, 4. NONE

Clear MTO with "%" "&" or "OFF" as arguments.

MWeight "n" Default: 10
Mode: All except Packet Host: Mw

Parameters:

"n" - 5 to 15, specifies roughly 10 times the ratio of one dot length to one inter-element space length in transmitted Morse code.

A value of 10 results in a 1:1 dot-space ratio. A setting of 5 results in a 0.5:1 ratio, while a setting of 15 (maximum) results in a 1.5:1 ratio. MWEIGHT applies only to the Morse transmit mode and the CW ID in all modes except packet. MWEIGHT does not affect the code output by the MID command.

MXmit ON|OFF Default: OFF
Mode: Packet Host: Mx

Parameters:

ON - Monitor transmitted packets in the same manner as received packets.
OFF - Do not monitor transmitted packets.

When MXMIT is ON, transmitted packets are monitored in the same manner as received packets. The monitoring of transmitted packets is subject to the settings of MONITOR, MCON, MFROM, MTO, MRPT and TRACE. Most transmitted packets occur during connections so MCON should probably be set to a non-zero value.

MYAlias call[-n] Default: none
Mode: Packet Host: MA

Parameters:

call - Alternate packet digipeater identity of your PK-232
"n" - 0 to 15, an optional substation ID (SSID)

MYALIAS specifies an alternate call sign (in addition to the call sign specified in MYCALL) for use as a digipeater only. In some areas wide-coverage digipeater operators change their call sign to a shorter and easier to remember identifier.

MYALTcal aaaa Default: none
Mode: AMTOR Host: MK

Parameters:

aaaa - Your alternate SELective CALling code (SELCALL)

Use the MYALTCAL command to specify an your alternate SELCALL which, under certain conditions, may be convenient or necessary. You can enter an additional SELCALL code not related to your call sign. The alternate SELCALL can be any four alphabetical characters, or can be numeric strings of either four or five numbers. MYALTCAL is generally used for special applications such as receiving network or group broadcasts in AMTOR Mode B Selective (Bs or SELFEC).

MYcall call [-"n"] Default: PK232
Mode: Packet Host: ML

Parameters:

call - Your call sign
"n" - 0 - 15, indicating an optional substation ID, (SSID)

Use the MYCALL command to load your call sign into your PK-232.

The "PK232" default call sign is present in your PK-232's ROM when the system is manufactured. This "artificial call" must be changed for packet operation.

Two or more stations cannot use the same call and SSID on the air at the same time. Use a different SSID if you have more than one packet station on the air.

MYIdent aaaaaaa[aa] Default: none
Mode: AMTOR Host: Mg

Parameters:

aaaaaaa[aa] - Specifies the 7-character SELCALL as described in CCIR Rec. 625.

The MYIDENT command holds the CCIR Rec. 625 seven-character AMTOR SELCALL.

Amateurs may simply enter their callsign and the PK-232 will automatically translate it to a 7-character SELCALL as shown below:

MYIDENT KA1XYZ becomes MYIDENT KAIXYZZ.

If aaaaaaa[aa] is nine numerals, the unit translates the numerals to seven letters according to Recommendation 491. If aaaaaaa consists of seven legal characters, the PK-232 accepts the characters without modifying them. Legal SELCALL characters for Rec. 625 are the letters A-Z except G, H, J, L, N and W. If aaaaaaa is a string of characters of any length that includes illegal characters, the PK-232 will do the following translation on the characters:

0: O	4: Y	8: B	J: U
1: I	5: S	9: P	L: F
2: Z	6: D	G: C	N: V
3: E	7: T	H: K	W: M

All other letters are unchanged.

If MYSELCAL and MYIDENT are both none (defaults), no incoming ARQ or SELFEC call can establish communications with the unit.

MYMail call[-"n"] Default: none
Mode: Packet/MailDrop Host: Me

Parameters:

Call - The Call Sign you wish to use for the MailDrop.
"n" - Numeral indicating an optional substation ID (SSID) or extension.

Call is the call sign of the MailDrop, default -none.

"Call" may have an optional SSID, and must not be the same call sign and SSID as MYCALL. If you do not set MYMAIL, the MailDrop will use the same call sign and SSID as entered in MYCALL. For example, if you have set MYCALL to N7ML then MYMAIL may be N7ML-1 through N7ML-15. You can use the CTEXT and MTEXT messages to inform other stations who connect of your MYCALL and MYMAIL call signs.

MYPTcall callsign Default PK232
Mode: Pactor Host: Mf

Use the MYPTCALL command to load your call sign Into your PK-232.

If you have not loaded a call into the PK-232 with MYPTCALL, the call loaded in MYCALL will be used. The difference between MYCALL and MYPTCALL is that MYCALL allows only the dash (-) to be used while MYPTCALL will allow any punctuation with the call.

If calls have not been loaded into either MYCALL or MYPTCALL, the PK-232 will not allow transmission on Pactor. An error message "Need MYCALL" will be displayed if transmission is attempted.

Example:

MYPTCALL K6RFK/ZL <Enter>

KYSelcal ease Default: none
Mode: AMTOR Host: MG

Parameters:

sees - Specifies your SELective CALling code (SELCALL)

Use the MYSELCAL command to enter the SELCALL (SELective CALLing) code required in AMTOR ARQ (Mode A) and SELFEC operating modes. MYSELCAL is a unique character string which must contain four alphabetic characters and is normally derived from your call sign.

Amateurs may simply enter their callsign and the PK-232 will automatically translate it to a 4-character SELCALL using the grouping table below:

GROUP	CALL	SELCALL
I by2	WIXY	WWXY
I by3	W1XYZ	WXYZ
2 by1	ABIX	AABX
2 by2	ABLXY	ABXY
2 by3	KAIXYZ	KXYZ

Although the convention is to form the SELCALL from the call sign, your PK-232 can include any AMTOR character in the SELCALL. In accordance with CCIR Recommendation 491, four- or five-digit numbers may be entered; the PK-232 automatically translates the numeric entry to your four-letter alpha SELCALL.

NAVMsg all, none, Yes/No (letters) Default: All
Mode: NAVTEX Host: NM

Parameters:

letters all, none, YES List, NO List. List of up to 13 letters which may or may not be separated by spaces, commas or TABS.

NAVMSG uses Letter arguments to determine which NAVTEX messages your PK-232 will print. NAVTEX messages are grouped into classes by the second letter in the Preamble. The NAVMSG Command allows ALL, NONE or a list of up to 13 letters representing message types to be Monitored or Rejected.

NAVY-SG may be cleared with “%”, “&” or "OFF” as arguments.

This page is blank

NAVStn all, none, Yes/No (letters) Default: All
Mode: NAVTEX Host: NS

Parameters:

Letters — all, none, YES List, NO List. List of up to 13 letters which may or may not be separated by spaces, commas or TABS.

The NAVSTN command uses letter arguments to determine which NAVTEX transmitting stations the PK-232 will print. NAVTEX transmitters are identified by the 26 letters of the alphabet A-Z. The NAVSTN Command allows ALL, NONE or a list of up to 13 letters representing NAVTEX transmitting stations to be Monitored or Rejected.

NAVSTN may be cleared with "%", "&" or "OFF" as arguments.

Navtex Immediate Command
Mode: All Host: MA

NAVTEX is an immediate command that switches your PK-232 into the NAVTEX receive mode. The PK-232 can accept only, or lock-out certain message classes and transmitting stations with the NAVMSG and NAVSTN commands described above.

For logging purposes, NAVTEX mode uses the setting of DAYTIME to print the date and/or time in front of the preamble if MSTAMP and DAYSTAMP are ON.

NEwmode ON/OFF Default: ON
Mode: All Host: NE

Parameters:

ON — The PK-232 automatically returns to the Command Mode at disconnect.
OFF — The PK-232 does not return to Command Mode at disconnect.

Your PK-232 always switches to a data transfer mode at the time of connection, unless NOMODE is ON. NEWMODE determines how your PK-232 behaves when the link is broken.

When NEWMODE is ON (default) and the link is disconnected, or if the connect attempt fails, your PK-232 returns to Command Mode. If NEWMODE is OFF and the link is disconnected, your PK-232 remains in Converse or Transparent Mode unless you have forced it to return to Command Mode.

NOmode ON|OFF — Default: OFF
Mode: All — Host: NO

Parameters:

ON - The PK-232 switches modes only upon explicit command.
OFF - The PK-232 changes modes according to NEWMODE.

When NOMODE is OFF (default), your PK-232 switches modes automatically according to NEWMODE. When NOMODE is ON your PK-232 never switches from Converse or Transparent Mode to Command Mode (or vice versa) by itself. Only specific commands (CONVERSE, TRANS, or <CTRL-C>) typed by you change the operating mode.

NUCr ON|OFF — Default: OFF
Mode: All — Host: NR

Parameters:

ON - <NULL> characters ARE sent to the terminal following <CR> characters.
OFF - <NULL> characters ARE NOT sent to the terminal following <CR>s.

The NULLS command sets the number of <NULL> characters that will be sent. Some older printer-terminals require extra time for the printing head to do a carriage return and line feed. NUCR ON solves this problem by making your PK-232 send <NULL> characters (ASCII code $00) to your computer or terminal.

NULf ON|OFF — Default: OFF
Mode: All — Host: NF

Parameters:

ON - <NULL> characters are sent to the terminal following <LF> characters.
OFF - <NULL> characters are not sent to the terminal following <LF>s.

Some older printer-terminals require extra time for the printing head to do a carriage return and line feed. NULF ON solves this problem my making your PK-232 send <NULL> characters (ASCII code $00) to your computer or terminal. The NULLS command sets the number of <NULL> characters that will be sent.

NULLs "n" — Default: 0 (zero)
Mode: All — Host: NU

Parameters:

"n" - 0 to 30 specifies the number of <NULL> characters to be sent to your computer or terminal after <CR> or <LF> when NUCR or NULF are set ON.

NULLS specifies the number of <NULL> characters (ASCII $00) to be sent to the terminal after a <CR> or <LF> is sent. NUCR and/or NULF must be set to indicate whether nulls are to be sent after <CR>, <LF> or both. The null characters are sent from your PK-232 to your computer only in Converse and Command Modes.

Nums — Immediate Command
Mode: Baudot, AMTOR, TDM — Host: NX

In Baudot, AMTOR and TDM receive, the NUMS command, or "N" will force the PK-232 into the FIGS case.

OK — Immediate Command
Mode: SIGNAL — Host: OK

OK normally follows the SIGNAL command after it has determined the class and speed of the received station. Typing OK will change the commands RXREV, RBAUD or ABAUD and OPMODE to their proper value. If the SIGNAL command did not reveal any useful information, typing OK will produce the "?bad" error message.

Opmode — Immediate Command
Mode: Command — Host: OP

OPMODE is an immediate command that shows the PK-232's current mode of operation and system status. Opmode also displays the MORSE speed when in the Morse mode. Use the OPMODE command at any time when your PK-232 is in the Command Mode to display the present operating mode. Here is a typical example:

```
cmd:o
OPmode   AScii      RCVE
```

PAcket — Immediate Command
Mode: Command — Host: PA

Use the PACKET command to switch your PK-232 into packet radio mode from any other operating mode.

PACLen "n" — Default: 128
Mode: Packet — Host: PL

Parameters:

"n" - 0 to 255 specifies the maximum length of the data portion of a packet.
0 - Zero is equivalent to 256.

PACLEN sets the maximum number of data bytes to be carried in each packet's "information field." Most keyboard-to-keyboard operators use the default value of 128 bytes for routine VHF/UHF packet services. Your PK-232 automatically sends a packet when the number of characters you type for a packet equals "n."

Reduce PACLEN to 64, or even 32 when working "difficult" HF radio paths.

PACTime EVERY/AFTER -n- Default:AFTER 10 (1000 msec.
Mode: Packet Host: PT

Parameters:

"n" - 01 to 250 specifies 100-millisecond intervals.
EVERY - Packet time-out occurs every "n"' times 100 milliseconds.
AFTER - Packet time-out-occurs when "n" times 100 milliseconds elapse without input from the computer or terminal.

The PACTIME parameter sets the amount of time in 100 msec increments that the PK-232 will wait for a character to be received on the serial port before sending a packet in Transparent Mode. The PACTIME parameter is always used in Transparent Mode but is also used in Converse Mode if CPACTIME is ON.

When EVERY is specified, the characters you type are "packetized" every "n" times 100 milliseconds. When AFTER is specified, the characters you type are "Packetized" when input from the terminal stops for "n" times 100 milliseconds.

The PACTIME timer is not started until the first character or byte is entered. A value of 0 (zero) for "n" means packets are sent with no wait time.

PACTor (PT for short) Immediate Command
Mode: Command Host: Pt

Pactor is an immediate command that switches the PK-232 into the Pactor mode of operation. This mode is an option.

Pactor is a mode of data communication that combines some of the features of both AMTOR and packet. The abbreviated command is PT. It has both a linked mode called ARQ and a non-linked mode called unproto. See Chapter 11 for details.

PARity "n" Default: 3 (even)
Mode: All Host: PR

Parameters:

"n" — 0 to 3 selects a parity option from the table below.

PARITY sets the PK-232's parity for RS-232 terminal according to the table below:

0	no parity	2	no parity
1	odd parity	3	even parity

The parity bit, if present, is stripped automatically on input and is not checked in command and Converse Modes. In Transparent Mode all eight bits (including parity) are transmitted.

The change will not take effect until a RESTART is performed. Be sure to change the computer or terminal to the same parity setting.

PASs "n" Default: $16 <CTRL-V>
Mode: Packet, ASCII and Pactor Host: PS

Parameters:

0 to $7F (O to 127 decimal) specifies an ASCII character code.

PASS selects the ASCII character used for the "pass' input editing commands. The parameter "n" is the ASCII code for the character used to pass editing characters (default <CTRL-V>). The PASS character signals that the following character is to be included in a packet Pactor or ASCII text string.

The rest of this page is blank

PASSAll ON/OFF — Default: OFF
Mode: Packet — Host: PK

Parameters:

ON -Your PK-232 will accept packets with valid or invalid CRCS.
OFF -Your PK-232 will accept packets with valid CRCs only.

PASSALL turns off the PK-232's packet error-detecting mechanism and displays received packets with invalid CRCS. PASSALL is normally turned OFF (default); which ensures that packet data la error-free by rejecting packets with invalid CRC fields. When PASSALL is ON, packets are displayed, despite CRC errors. The MHEARD logging is disabled since the call signs detected may be incorrect.

PErsist "n" — Default: 63
Mode: Packet — Host: PE

Parameters:

"n" — 0 to 255 specifies the threshold for a random attempt to transmit.

The PERSIST parameter works with the PPERSIST and SLOTTIME parameter to achieve true p-persistent CSMA (Carrier-Sense Multiple Access) in Packet operation.

PK ["n"] — Default: none
Mode: All — Host: PK

Parameters:

"n" - a hex number used to access the PK-232's memory and I/O locations.

PK (Peek/Poke) permits access to memory locations. To use the PK command:

- Set the memory address into the ADDRESS command.
- Use the PK command without arguments to read that memory location.
- Use PK with one argument O-$FF to write to that memory location.

PK-232 RAM locations are $8000-$FFFF. ROM begins at $0000. This command is used primarily as a programmer's aid and is not needed for normal PK-232 use.

PPersist ON/OFF — Default: ON
Mode: Packet — Host: pp

Parameters:

ON The PK-232 uses p-persistent CSRA (Carrier Sense Multiple Access).
OFF The PX-232 uses DWAIT for TAPR-type 1-persistent CSMA.

When PPERSIST is ON (default), the PK-232 uses the PERSIST and SLOTTIME parameters for p-persistent CSMA instead of the older DWAIT CSMA procedure.

When your computer has queued data for transmission, the PK-232 monitors the DCD signal from its modem. When the channel clears, the PK-232 generates a random number between 0 and 255. If this number is less-than or equal to "PERSIST", the PK-232 transmits all frames in its queue. If the random number is greater than "P", the PK-232 waits .01 * SLOTTIME seconds and repeats the attempt. PPERSIST can be used in both KISS and normal AX.25 operation.

PRCon ON|OFF — Default: OFF
Mode: All — Host: PC

Parameters:

ON - A parallel printer is connected to the PK-232 via the special cable.
OFF - There is no parallel printer connected, or it is not currently in use.

PRCON tells the PK-232 whether or not a parallel printer is connected via the optional "Y" facsimile cable. When PRCON is ON, the mode and status LED's are disabled, and do not perform their proper function. Some LED's may remain lit, and others may flash randomly. When you are through printing, disconnect the printer, turn PRCON OFF and the status LED's will return to normal operation.

PRFax ON|OFF — Default: ON
Mode: FAX — Host: PF

Parameters:

ON - FAX graphics are sent to the parallel printer if PRCON is on.
OFF - FAX graphics are sent to the RS-232 serial port.

PRFAX should be ON if a parallel printer is connected to the PK-232 and in use for printing facsimile pictures. If you wish to save the facsimile graphic data to disk for later retrieval, simply turn PRFAX OFF and set AWLEN to 8 to allow 8-bit data to be sent to the serial port.

PROut ON|OFF — Default: OFF
Mode: All — Host: PO

Parameters:

ON - All characters are sent to the parallel printer if PRCON is also ON.
OFF - All text and data is sent to the terminal through the serial port.

This command is useful for any mode where the user wants to get a printed copy of what is being received by the PK-232. It is especially desirable for those using a terminal with the PK-232 who otherwise can not get hard copy of received text. It is also handy if you wish to use your computer for another purpose, and still monitor channel activity.

PRType "n" Default: 2 (Epson)
Mode: FAX Host: PY

Parameters:

"n" - 0 to 255, specifying a code for the type of dot graphics sequences used by your printer.

The following is a list of the different printer graphics types the PK-232 supports. Most of these types are broken up by manufacturers, however EPSON and IBM are the most popular and are supported by many printer manufacturers not shown in the list below.

If you are unsure about which type of graphics printer you have, check your printer's manual and locate a graphics command that matches one from the GRAPHICS ON section of the table below. If you find that your printer supports the "CHR$(27) K n1 n2" then try the EPSON (default) or IBM graphics formats before any of the others listed. These are the most widespread graphics formats in use that it is very likely your printer supports at least one of them.

PRTYPE	Printer	GRAPHICS ON Sequence
0	Epson	CHR$(27) K n1 n2
4	IBM	CHR$(27) K n1 n2
8	Radio Shack (Tandy)	CHR$(18)
12	Apple (G)	CHR$(27) G n n n n
16	Apple (S)	CHR$(27) S n n n n
20	old Okidata	CHR$(3)
24	Okidata	CHR$(3)
28	Gemini 10, 15	CHR$(27) K n1 n2
32	Star Micronics	CHR$(27) K n1 n2
36	GX-100, Gorilla	CHR$(8)
40	Texas Instruments	CHR$(27) K n1 n2
44	Genicom	CHR$(27) K n1 n2
48	Miscellaneous (HP ThinkJet)	
52	Citizen	CHR$(27) K n1 n2
56	NEC	CHR$(27) > CHR$(27) M CHR$(27) S0960
60	Anadex	CHR$(28)

Unsupported PRTYPE settings are treated as PRTYPE 0.

Notice that the PRTYPEs are assigned in groups of four. This is done to handle the different carriage widths used (standard 8-1/2" and wide 13") and also the number of data bits the printer can accept (7 or 8). Add the following number to each of the above PRTYPEs to customize the PK-232 for your printer.

+0: 7-bit graphics data, standard (8-1/2" paper) printer carriage
+1: 7-bit graphics data, wide (13" paper) printer carriage
+2: 8-bit graphics data, standard (8-1/2" paper) printer carriage
+3: 8-bit graphics data, wide (13" paper) printer carriage

As an example, the default PRTYPE setting of 2 was chosen because most printers are standard width (8-1/2" paper) and will handle the Epson 8-bit graphics format. Thus the Epson PRTYPE of 0 was chosen from the table above, and the quantity +2 was added to select the standard printer carriage and 8-bit data.

If you have a wide carriage Epson printer (and wide paper of course) you would have wanted to add the quantity +3 to the Epson PRTYPE listed in the table.

PT200 ON/OFF — Default: ON
Mode: Pactor — Host: PB

Pactor uses an adaptive data rate selection scheme. The normal data rate is 100 baud. If conditions permit, the data rate will be shifted to 200 baud automatically. If the error rate becomes too high at 200 baud the data rate will automatically be reduced to 100 baud. There can be conditions where the data rate is frequently shifting, causing a loss in the actual information data rate. The command PT200 when off, will prevent the data rate from automatically changing to 200 baud. When PT200 is ON (default), the PK-232 will allow automatic data rate selection.

PTConn [!]aaaa(aa)
Mode: Pactor — Host: PG

Parameters:

aaaa(aa) is the call sign of the Pactor station to be called

PTConn is an immediate command that starts the Pactor connect protocol. To start a Pactor connect, type "PIC' followed by the other station's call sign:

Example: PTC N7ML <Enter>

As soon as the <CR> is typed, the PK-232 will begin keying your transmitter on and off with the Pactor connect sequence.

If you are connecting with a station via long path, i.e. more than half way around the world, use an exclamation mark before the callsign:

Example: PTC !N7ML <enter>

This changes the Pactor timing to allow for the extended radio propagation time.

PTHUFF "n" Default: 0
Mode: Pactor Host: pH

"n" — 0 to 3, specifying a type of compression that may be used in Pactor.

To enhance the effective data rate in Pactor, a data compression scheme called may be automatically enabled.

0 - is no compression (default).
1 - is Huffman encoding.
2,3 - presently not implemented but reserved for future use.

Instead of using the normal 8 bit ASCII representation of a character, Huffman encoding assigns each character a code that may be as few as 2 bits for the most used characters to as long as 15 bits for the least used characters. For English (and most other) languages, the use of Huffman compression results in a smaller number of bits necessary for a given message. For messages consisting of non-text information such as computer programs, Huffman compression would need more bits than ASCII and would be less efficient.

If PTH is set off, Pactor will never use Huffman compression. When PTH is set on, Huffman compression will be used if it is more effective. Do not use Huffman compression with binary file transfers as it only works with 7 bit data.

PTList Immediate Command
Mode: Pactor Host: PN

PTList is an immediate command that switches your PK-232 into the Pactor listen mode.

You can usually monitor a Pactor contact between two connected stations using the Pactor listen mode. Since your station is not part of the error free link, if the CRC check does not produce a correct check sum, nothing will be displayed. If the receiving station requests a repeat, and you have copied the packet, it will not print twice.

PTOver "n" Default: <CTRL-Z> ($1A)
Mode: Pactor Host: PV

"n" — A hexadecimal value from $00 to $7F used to select the change-over character used in linked Pactor. The default is <CTRL-Z>.

PTOver is the character, conventionally <CTRL-Z>, that is used to change the direction of data transmission in a linked Pactor operation. When you are finished transmitting information and you are ready to receive information from the other station, use the PTOver character. Also see AChg.

PTSend – "n, x" Default: 1,2
Mode: Pactor Host: PD

Parameters:

"n" - 1 or 2 selects the transmit baud rate.
- 1 to 5 selects the number of times the data is repeated.

PTS "n, x" initiates an unproto Pactor transmission. To end the transmission, type <ctrl-D>.

"n"

1 selects 100 baud,
2 selects 200 baud.

In order to increase the probability of correct transmission, the unproto Pactor transmission sends the message data a selected number of times. The parameter x sets the number of times the data is sent.

Example:

PTS 1 3 <Enter> would start a 100 baud unproto transmission with the message data sent three times.

The transmission may be started using the default, 100 baud, two repeats, by typing "PTS" without "n x."

Example:

PTS <Enter>

The rest of this page is blank

RAWhdlc ON|OFF — Default: OFF
Mode: Packet — Host: RW

Parameters:

ON - The PK-232 operates in a raw HDLC packet mode when HOST is ON.
OFF - The PK-232 operates in standard AX.25.

The RAWHDLC command enables the PK-232 to bypass the AX.25 packet implementation and communicate directly with the hardware HDLC (Z8530).
HOST mode must be ON to communicate with the PK-232 in the RAW HDLC mode.

See Timewave's PK-232 Technical Manual for full information on Raw HDLC Mode.

RBaud "n" — Default: 45 bauds (60 WPM)
Mode: Baudot RTTY — Host: RB

Parameters:

"n" - Specifies the Baudot data rate in bauds from the PK-232 to the radio.

RBAUD sets the radio ("on-air") baud rate only in the Baudot operating mode. This value has no relationship to your computer or terminal program's baud rate. Available Baudot data rates include 45, 50, 57, 75, 100, 110, 150, 200 and 300 bauds (60, 66, 75, 100, 132, 145, 198, 264 and 396 WPM).

You may use RBAUD UP (RB U) to go to the next highest Baudot speed or RBAUD

DOWN (RB D) to go to the next lowest Baudot speed.

Rcve — Immediate Command
Mode: Baudot/ASCII/AMTOR/FAX/Morse — Host: RC

RCVE is an immediate command, used in Morse, Baudot, ASCII, ARQ, FEC and FAX modes to switch your PK-232 from transmit to receive.

o You must return to the Command Mode to use the RCVE command.

RECeive "n" — Default: $04 <CTRL-D>
Mode: Baudot/ASCII/Morse/AMTOR/FAX — Host: RE

Parameters:

"n" - 0 to $7F (0 to 127 decimal) specifies an ASCII character code.

Parameter "n" is the numeric ASCII code for the character you'll use when you want the PK-232 to return to receive.

The RECEIVE command allows you to insert a character (default <CTRL-D>) in your typed text that will cause the PK-232 to return to receive after all the text has been transmitted.

REDispla "n" Default: $12 <CTRL-R>
Mode: All Host: RD

Parameters:

"n" - 0 to $7F (0 to 127 decimal) specifies an ASCII character code.

REDISPLA changes the redisplay-line input editing character.

Parameter "n" is the numeric ASCII code for the character you'll use when you want to re-display the current input line.

Type the REDISPLA character (default <CTRL-R>) to re-display a command or text line you've just typed. This can be helpful when editing a line especially if your terminal does not support <BACKSPACE>. It can also be used in Packet to display a packet that might have been received while you were typing. A <BACKSLASH> is appended to old line, and the corrected line is shown below it.

RELink ON|OFF Default: OFF
Mode: Packet Host: RL

Parameters:

ON - The PK-232 will try to automatically reconnect the distant station after the link has timed out on retries.
OFF - The PK-232 will not attempt to re-establish the failed link (default).

Set RELINK ON if you want the PK-232 to automatically try to reconnect to a distant packet station if the link fails.

RESET Immediate Command
Mode: Command Host: RS

RESET is an immediate command that resets all parameters to PK-232's PROM default settings and reinitializes the PK-232. All personalized parameters, monitor lists and MailDrop messages will be lost.

RESptime "n" Default: 0 (000 msec.)
Mode: Packet Host: RP

Parameters:

"n" - 0 to 250 specifies 100-millisecond intervals.

RESPTIME adds a minimum delay before your PK-232 sends acknowledgment packets. This delay may run concurrently with the default wait time set by DWAIT and any random wait in effect.

During a file transfer, RESPTIME can help avoid data/ack collisions caused by the sending stations TNC pausing briefly between transmitted data frames.

RESTART Immediate Command
Mode: Command Host: RT

RESTART is an immediate command that reinitializes the PK-232 while retaining the user's settings. The effect of the RESTART command is the same as turning the PK-232 OFF, then ON again.

RESTART does not reset the values in bbRAM. See the RESET command.

REtry "n" Default: 10
Mode: Packet Host: RY

Parameters:

"n" 0 to 15 specifies the maximum number of packet-retries.

The AX.25 protocol uses the retransmission of frames that have not been acknowledged as a means to insure that ALL transmitted frames are received. The number of retries that the PK-232 will attempt is set by the RETRY command (default 10). If the number of retries is exceeded, the packet link may be lost.

RFec ON/OFF Default: ON
Mode: AMTOR Host: RF

Parameters:

ON -Mode B (FEC) signals are displayed in AMTOR Standby (default).
OFF -Mode B (FEC) signals are not displayed in AMTOR Standby.

Turn the RFEC command OFF to prevent the reception and display of all FEC signals received while in AMTOR Standby.

RFRame ON/OFF Default: OFF
Mode: Baudot and ASCII RTTY Host: RG

Parameters:

ON Check received Baudot and ASCII characters for framing errors.
OFF Print received Baudot and ASCII characters regardless of errors.

When RFRAME is OFF (default), Baudot and ASCII modes operate as always, that is characters are copied based on the presence of the DCD signal.

When RFRAME is ON, the PK-232 checks received Baudot and ASCII characters for framing errors. A framing error on a character in an asynchronous mode (such as Baudot and ASCII) occurs when the bit in the stop position is detected to be the wrong polarity (the polarity of the start bit is supposed to be space or 0, while the stop bit is supposed to be mark or 1). The unit stops copying characters when 4 out of the last 12 characters had framing errors. Copy resumes when the most recent 12 characters are error-free. This should significantly reduce the copying of garbage characters when no signals are present. When RFRAME is ON, characters are copied based on the recent history of framing errors.

RXRev ON/OFF Default: OFF
Mode: Baudot and ASCII RTTY/AMTOR Host: RX

Parameters:

ON	—	Received data polarity is reversed (mark-space reversal).
OFF	—	Received data polarity is normal.

Use the RXREV Command to invert the polarity of the data demodulated from the received mark and space tones.

In some cases, you may be trying to copy a station that's transmitting "upside down" although it is receiving your signals correctly. This is especially true when listening to signals in the Short Wave bands. Set RXREV ON to reverse the data sense of received signals.

RXREV operates only at RBAUD and ABAUD speeds up to 150 baud.

The rest of this page is blank

SAmple "n" Immediate Command
Mode: Command Host: SA

"n" — 20 to 255 specifies the sampling rate in baud.

This is a new operating mode with the Summer 1991 PK-232 firmware release for advanced users interested in decoding unknown synchronous data transmissions. SAMPLE is similar to the SBIT and 6BIT modes, but operates on synchronous data, whereas 5B1T and 6BIT are used on signals known to be asynchronous.

SAMPLE syncs up on any regularly-paced data transmission and samples the data once per bit, packaging the data in groups and sending the groups to the user for further analysis. The user can use SAMPLE to capture data bits from a synchronous transmission, such as FEC, TDM or an 'unknown model' not identified by the SIGNAL command. The transmission is actually sampled several times per data bit. The PK-232 does a majority vote an the last few samples to represent the value of the data bit.

One use for the SAMPLE command is to record the output to a disk file, then write a program to analyze the results for synchronous/asynchronous, bit sync patterns, data decoding, etc.

SAMPLE data is captured in 6-bit units; the order of bit reception is MSB first, LSB last. The TNC sends the data unit to the user with a constant of hex 30 added to each unit, the same as the 6BIT command. The 6-bit unit is a compromise between hexadecimal and 8-bit binary output, The 6-bit unit yields shorter disk files than 4-bit hexadecimal characters, but encounters no interference from terminal communications programs and the TNC's Converse and Command modes. The 6-bit unit's range of $30-6F falls within the printable ASCII range, allowing the TNC to insert end-of-line carriage returns that can be ignored by the user's analysis software.

To use SAMPLE, set ACRDISP to a non-zero value such as 77. This will break up the recorded disk file into lines. Tune in the signal, set WIDESHFT ON or OFF as needed, and get the transmission rate from the SIGNAL command. Now type "SAMPLE (rate)". As an example, SIGNAL may identify a transmission as 96 baud TDM; in this case type the following:

SAMPLE 96 <Carriage Return>

Now begin the capture to a disk file with the terminal program. At the end of the session, edit the disk file and remove any TNC commands that were echoed before or after the received data.

Occasionally SIGNAL will identify a Baudot transmission at a rate that SAMPLE cannot sync up on. This would happen if the Baudot signal had a stop bit duration 1.5 times the data bit duration. In this case, SAMPLE at twice the baud rate and compensate for the doubled data bits in the analysis software. Note that it might be more useful to let the TNC do the start/stop bit work by using the 5BIT command rather than SAMPLE. 5BIT uses RBAUD, and adds a constant of hex 40 to each 5-bit character received.

Note: RXREV does affect the sense of the SAMPLE data.
RXREV should however not be changed while capturing data.

SELfec aaaa[aaa] — Immediate Command
Mode: AMTOR FEC — Host: SE

Parameters:

aaaa - Specifies the distant station's SELective CALling code (SELCALL).

The SELFEC command starts a SELective FEC (Mode Bs) transmission to a specific distant station when you enter that station's SELCALL (SELective CALLing) code. The SELFEC command must be accompanied by a unique character sequence (aaaa) that contains four or seven alphabetic characters. You do not have to type the SELCALL a second time if you intend to call the same station again right away.

See MYSELCAL and MYIDENT to enter your 4- and 7-character SELCALLs. Other AMTOR commands are ACHG, ACRRTTY, ADELAY, ALFRTTY, ARQTMO, EAS, HEREIS and RECEIVE.

SEndpac "n" — Default: $0D <CTRL-M>
Mode: Packet — Host: SP

Parameters:

"n" - 0 to $7F (0 to 127 decimal) specifies an ASCII character code.

Use the SENDPAC command to select the character used to cause a packet to be sent in Converse Mode. The parameter "n" is the ASCII code for the character you want to use to force your input to be sent. Use default SENDPAC value $0D for ordinary conversation with ACRPACK ON to send packets at natural intervals.

SIgnal — Immediate Command
Mode: All — Host: SI

SIGNAL is an immediate command that causes the PK-232 to enter the Signal Identification and Acquisition Mode (SIAM). The PK-232 will respond with:

```
Opmode  was  BAudot
Opmode  now  SIgnal
```

After a few seconds the PK-232 will show the signals baud rate. A few seconds later it will identify the signal type.

SLottime "n" — Default: 30 (300 msec.)
Mode: Packet — Host: SL

Parameters:

"n" - 0 to 250 specifies the time the PK-232 waits between generating random numbers to see if it can transmit.

The SLOTTIME parameter works with the PPERSIST and PERSIST parameters to achieve true p-persistent CSMA (Carrier-Sense Multiple Access) in Packet operation.

SQuelch ON|OFF — Default: OFF
Mode: Packet — Host: SQ

Parameters:

ON - Your PK-232 responds to positive-going squelch voltage.
OFF - Your PK-232 responds to negative-going squelch voltage.

Normally, your PK-232 uses its CSMA (Carrier Sense Multiple Access) circuit to decide whether or not it is clear to transmit on a packet channel. If there are non-packet signals on the channel you're using (such as voice), you will want to use true RF-carrier CSMA by monitoring the squelch line voltage from your radio.

If SQUELCH is OFF (default) the PK-232 inhibits transmissions when there is a POSITIVE voltage on the Radio connectors squelch input line. When there is no voltage or NO CONNECTION to this pin, the PK-232 allows packets to be sent.

When SQUELCH is ON, the PK-232 will inhibit packet transmissions when there is 0 volts applied to the squelch input pin on the Radio connector.

SRXall ON|OFF — Default: OFF
Mode: AMTOR — Host: SR

Parameters:

ON - Receive ALL selective (SELFEC) transmissions.
OFF - Receive only SELCALL-addressed SELFEC transmissions.

SRXALL permits the reception of selectively coded inverse FEC signals normally not available for decoding. Set SRXALL ON to activate this feature.

STArt "n" — Default: $11 <CTRL-Q>
Mode: All — Host: ST

Parameters:

"n" - 0 to $7F (0 to 127 decimal) specifies an ASCII character code.

Use the START command to choose the user START character (default <CTRL-Q>) you want to use to restart output FROM the PK-232 TO the terminal after it has been halted by typing the user STOP character. See the XFLOW command.

STOp "n" — Default: $13 <CTRL-S>
Mode: All — Host: SO

Parameters:

"n" - 0 to $7F (0 to 127 decimal) specifies an ASCII character code.

Use the STOP command to select the user STOP character (default <CTRL-S>) you will use to stop output FROM the PK-232 TO the terminal. See the XFLOW command.

TBaud "n" Default: 1200 bauds
Mode: All Host: TB

Parameters:

"n" - Specifies the data rate in bauds, on the RS-232 serial I/O port.

TBAUD sets the baud rate you are using to communicate with the PK-232 from your terminal or computer. Use TBAUD to set terminal rates not covered by the autobaud routine, such as 110 and 600 bauds. Set TBAUD to specify the terminal baud rate to be activated at the next power-on or RESTART. A warning message reminds you of this. Be sure you can set your terminal for the same rate.

The TBAUD command supports the following serial port data rates of 45, 50, 57, 75, 100, 110, 150, 200, 300, 400, 600, 1200, 2400, 4800 and 9600 bauds.

TClear Immediate Command
Mode: Command Host: TC

The TCLEAR command clears your PK-232's transmit buffer and cancels any further transmission of data when in the Baudot, ASCII, AMTOR or Morse operating modes. In Packet Mode, all data is cleared except for a few remaining packets.
You must be in the Command Mode to use TCLEAR.

TDBaud "n" Default: 96
Mode: TDM Host: TU

Parameters:

"n" - Specifies the data rate in bauds of the TDM signal you are receiving.

The default value of n is 96. TDB can be set to 0-200, but only some of these are legal values:

1-channel: 48, 72, 96
2-channel: 86, 96, 100
4-channel: 171, 192, 200

No error checking is done for values other than above. Bad values result in an internal TDBAUD of 96.

TDChan "n" Default: 0
Mode: TDM Host: TN

Parameters:

"n" - Specifies the TDM channel number.

"n" selects which data channel (default 0) to separate out from the multiplexed TDM signal. n can be set to 0-3, but only some of these have unique effects:

```
1-channel: No effect.
2-channel: 0 and 2 show Channel A.
           1 and 3 show Channel B.
4-channel: 0 shows Channel A.
           1 shows Channel B.
           2 shows Channel C.
           3 shows Channel D.
```

TDm — Immediate Command
Mode: TDM — Host: TV

TDM is an immediate command that places the PK-232 in the TDM receive mode. TDM stands for Time Division Multiplexing, also known as Moore code and is the implementation of CCIR Recommendation 342.

Use the PK-232 SIGNAL command first to determine the bit rate and to make sure that the signal is actually TDM. The SIGNAL command can detect one or two channel TDM transmissions.

The TDM command forces bit phasing; do this when changing frequency to another TDM signal. This is also useful when the PK-232 synchronizes on the wrong bit in the character stream, which is likely on a signal which is idling. TDM stations idle MOST of the time, so you may have to leave the PK-232 monitoring for an hour or two before any data is received.

TIme "n" — Default: $14 <CTRL-T>
Mode: All — Host: TM

Parameters:

"n" - 0 to $7F (0 to 127 decimal) specifies an ASCII character code.

The TIME command specifies which control character sends the time-of-day in the text you type into the transmit buffer or into a text file stored on disk.

At transmit time, the PK-232 reads the embedded control code (default <CTRL-T>), reads the time-of-day from the PK-232's internal clock and then sends the time to the radio in the data transmission code in use at that time. If the DAYTIME has not been set, and a control-T will cause the PK-232 to send an asterisk (*). When DAYSTAMP is set ON, the date is transmitted with the time.

NOTE: The TIME command cannot be embedded in CTEXT, BTEXT, MTEXT or AAB.

TMail ON|OFF — Default: OFF
Mode: AMTOR — Host: TL

Parameters:

ON - The PK-232MBX operates as a personal AMTOR BBS or MailDrop.
OFF - The PK-232MBX only operates as a normal CCIR 476 or 625 controller.

The PK-232's MailDrop is a personal mailbox that uses a subset of the W0RLI/WA7MBL PBBS commands and is similar to operation of APLINK stations. When TMAIL is ON and another station establishes an ARQ link with your MYSELCAL or MYIDENT, the remote AMTOR station may leave messages for you or read messages from you. Third-party messages are not accepted by your AMTOR MailDrop unless 3RDPARTY is ON.

See the MDCHECK, TMPROMPT, MDMON, MTEXT, MMSG MYSELCAL and MYIDENT commands.

TMPrompt text — Default: (see text)
Mode: AMTOR/MailDrop — Host: Tp

Parameters:

text - Any combination of characters and spaces up to a maximum of 80 bytes.

TMPROMPT is the command line sent to a calling station by your AMTOR MailDrop in response to a Send message command. The default text is:

"GA subj/GA msg, '/EX' to end."

Text before the first slash is sent to the user as the subject prompt; text after the slash is sent as the message text prompt. If there is no slash in the text, the subject prompt is "SUBJECT:" and the text prompt is from TMPROMPT.

TRACe ON|OFF — Default: OFF
Mode: Packet/FAX/Baudot/AMTOR — Host: TR

Parameters:

ON - Trace function is activated.
OFF - Trace function is disabled.

Packet:
The TRACE command activates the AX.25 protocol display. When TRACE is ON all received frames are displayed in their entirety, including all header information. The TRACE display is shown as it appears on an 80-column display. The following monitored frame is a sample:

```
W2JUP*>TESTER <UI>:
This is a test message packet.

Byte                Hex                   Shifted ASCII         ASCII
000: A88AA6A8 8AA460AE 6494AAA0 406103F0  TESTER0W2JUP 0.x  ......`.d...@a..
010: 54686973 20697320 61207465 7374206D  *449.49.0.:29:.6  This is a test m
020: 65737361 67652070 61636B65 742E0D    299032.80152:..   essage packet...
```

The byte column shows the offset into the packet of the first byte of the line. The hex display column shows the next 16 bytes of the packet, exactly as received, in standard hex format. The shifted ASCII column decodes the high-order seven bits of each byte as an ASCII character code. The ASCII column decodes the low-order seven bits of each byte as an ASCII character code.

FAX:
When Operating in FAX mode, TRACE is ON, and PRFAX is OFF, the graphics escape sequences and dot data are sent to the terminal with each byte expanded to two Hexadecimal characters. This helps get around the limitations of many terminal programs that do not allow 8-bit data to be saved to disk as an ASCII file.

Interspersed command prompts and even the L and R commands would have no effect on the final data and it could be translated back to binary data with a computer program.

Trans — Immediate Command
Mode: All — Host: Not Supported

TRANS is an immediate command that switches the PK-232 switch from the Command Mode to Transparent Mode. The current state of the radio link is not affected. Transparent Mode is primarily useful for computer communications. In Transparent Mode "human interface" features such as input editing, echoing of input characters, and type-in flow control are disabled.

- Use Transparent Mode for transferring binary or other non-text files.
- To exit the Transparent mode, type the COMMAND character (default <CTRL-C>) three times within the time period set by CMDTIME (default 1 Second).

TRFlow ON|OFF — Default: OFF
Mode: All — Host: TW

Parameters:

ON - Software flow control for the computer or terminal RECEIVING data is activated in Transparent Mode.
OFF - Software flow control for the computer or terminal RECEIVING data is disabled in Transparent Mode.

When TRFLOW is ON, the type of flow control used by the computer RECEIVING data in Transparent Mode is determined by how START and STOP are set.

When TRFLOW is OFF, only "hardware" flow control (RTS, DTR) is available to the computer RECEIVING data from the PK-232 in Transparent Mode.

If TRFLOW is ON, and START and STOP are set to values other than zero, software flow control is enabled for the user's computer or terminal. The PK-232 responds to the user START and user STOP characters while remaining transparent to all other characters from the terminal.

TRIes "n" Default: 0
Mode: Packet Host: TI

Parameters:

"n" - 0 to 15 specifies the current RETRY level on the selected input channel.

TRIES retrieves (or forces) the count of "retry counter" on the data channel presently selected.

If you type TRIES without an argument, the PK-232 returns the current number of tries if an outstanding unacknowledged frame exists. If no outstanding unacknowledged frame exists, the PK-232 returns the number of tries required to get an ACK for the previous frame.

If you type TRIES with an argument the "tries" counter is forced to the entered value. Using this command to force a new count of tries is not recommended.

TXdelay "n" Default: 30 (300 msec.)
Mode: Packet, Baudot and ASCII Host: TD

Parameters:

"n" - 0 to 120 specifies ten-millisecond intervals.

The TXDELAY command tells your PK-232 how long to wait before sending packet frame data after keying your transmitter's PTT line (default 300 msec).
All transmitters need some amount of start-up time to put a signal on the air. The default value of 300 msec should work with almost all transceivers.

In fact many of the newer transceivers can use smaller TXDELAY values. Crystal controlled transceivers can often use smaller values as well. On the other hand, tube-type transceivers and amplifiers can require a longer time to switch and may require TXDELAY to be increased. Experiment with the value to determine the shortest setting you can use in reliably in Packet.

Baudot and ASCII use TXDELAY between PTT ON and the start of transmitted data.

TXFlow ON|OFF — Default: OFF
Mode: Packet — Host: TF

Parameters:

ON - Software flow control for the PK-232 is activated in Transparent Mode.
OFF - Software flow control for the PK-232 is disabled in Transparent Mode.

When TXFLOW is ON, the setting of XFLOW determines the type of flow control used in Transparent Mode by the PK-232 to control TRANSMITTED data.

When TXFLOW is OFF, the PK-232 uses only hardware flow control to control TRANSMITTED data; all data sent to the terminal remains fully transparent.

When TXFLOW and XFLOW are ON, the PK-232 uses the Start and Stop characters (set by XON and XOFF) to control the input from the computer.

TXRev ON|OFF — Default: OFF
Mode: Baudot/ASCII/AMTOR — Host: TX

Parameters:

ON - Transmit data polarity is reversed (mark-space reversal).
OFF - Transmit data polarity is normal.

Use the TXREV Command to reverse the mark and space in the transmitted AFSK and FSK signals.

In some cases, the station you're working may be receiving inverted data although it is transmitting in correct polarity. Set TXREV ON to reverse the sense of your transmitted signals.

TXREV only works on ABAUD and RBAUD at speeds up to 150 baud.

UBit "n" ON/OFF — Default: 0
Mode: All — Host: UB

Parameters:

"n" - 0 to 255 specifying a User BIT that may be set ON or OFF.

The UBIT is an extension of the CUSTOM command which allows up to 255 ON/OFF functions to be added to the PK-232 without burdening users with a large number of commands. The functions controlled by UBIT are not things that most users will ever have to change. Still they are important enough to some users or application programs that we have included them under the umbrella command UBIT.

The following are examples of how to use the UBIT command:

UBIT 5	Returns the present status of UBIT 5
UBIT 1 ON	Sets the function controlled by UBIT 1 to ON
UBIT 10 T	Toggles the state of the function controlled by UBIT 10
UBIT	Returns the state of the last UBIT value that was accessed

Listed below are the UBIT functions and the default state that presently have been assigned. The default state of each UBIT is always shown first.

UBIT 0: ON: The PX-232 will discard a received packet if the signal is too weak to light the DCD LED.
OFF: The PK-232 will receive a packet regardless of the DCD status or the THRESHOLD control setting.

UBIT 1: OFF: Entering the command MONITOR ON or MONITOR YES causes the MONITOR command to be set to 4.
ON: Entering the command MONITOR ON or MONITOR YES causes the MONITOR command to be set to 6.

UBIT 2: ON: A Break signal received on the RS-232 line forces the PK-232 into Command mode from all modes except HOST mode.
OFF: A Break signal on the RS-232-line is ignored by the PK-232.

UBIT 3: OFF: Multiple connect Packet channels are numbd-red from 0-9.
ON: Multiple connect Packet channels are numbered A-J.

UBIT 4: ON: When transmitting in Baudot, the PK-232 inserts the FIGS after a space just prior to sending any figures space><FIGS><number>). This permits receiving stations to decode groups of figures correctly regardless of the USOS setting.
OFF: The PK-232 will not insert the FIGS character after each space. MARS operators may want to set UBIT 4 OFF for literal operation.

UBIT 5: OFF: The PK-232 will always power up in Command Mode.
ON: The PK-232 will remain in the last mode Converse, Command or Transparent) provided the battery jumper enabled.

UBIT 6: OFF: In Packet, monitoring is disabled when in the Transparent mode.
ON: Packet monitoring is active in the Transparent mode. MFROM, MT0, MRPT, MONITOR, MCON, MPROTO, MSTAMP, MXMIT, CONSTAMP and MBX are all active.

UB1T 7: OFF: In Morse receive, the character ..-- prints as a "^"
ON: In Morse, the character ..-- prints as a <Carriage Return>.

UBIT 8: OFF: In the Morse mode, the PK-232's modem is configured for standard Al-A single-tone ON/OFF keyed Morse.
ON: In the Morse mode, the PK-232's modem is configured for 2-tone FSK Morse operation on both transmit and receive. WIDESHFT, RXREV and TXREV are all active.

UBIT 9: ON: In AMTOR a received WRU character (FIGS-D) or in Pactor a <CTRL-E> will cause the Auto-Answerback text to be sent regardless of the setting of WRU. In AMTOR this is subject to the setting of the CODE command.
OFF: In AMTOR and Pactor a received WRU character will have no effect.

UBIT 10: OFF: polling in the HOST mode is subject to HPOLL and must be done for all changes in status.
ON: Status changes (e.g., Idle to Tfc) in AMTOR, FAX, TDM or NAVTEX causes the PK-232 to issue the following host block:

SOH $50 n ETB

where n is $30-36, the same number that the OPMODE command furnishes. This block is subject to EPOLL.

UBIT 11: ON: A "Connected" message appears when an AMTOR or Pactor ARQ link is first established using seven-character SELCALLs (CCIR 625).
OFF: No Connected message appears at the start of ARQ communications.

UBIT 12: OFF: The Packet Morse ID (MID) is ON/OFF keying of the low tone.

ON: The Packet Morse ID is sent in 2-tone FSK with the low tone being key-down and the high tone representing key-up. Use this setting to keep other stations from sending a packet during the Morse ID.

UBIT 13: OFF: MailDrop Connect status messages are always sent to the local user, regardless of the setting of MDMON.
ON: Remote user dialog and Connect status messages with the MailDrop are shown only if MDMON is ON.

UBIT 14: OFF: In Packet, the transmit buffer for data sent from the computer to the PK-232 is limited only by available PK-232 memory.
ON: In Packet, the serial flow control will permit only a maximum of 7 I-Frames to be held by the PK-232 before transmission. This solves a problem with the YAPP binary file transfer program which relies on a small TNC transmit buffer to operate correctly.

UBIT 15: Not used in the PK-232.
UBIT 16: Not used in the PK-232.

UBIT 17: OFF: Morse, Baudot, ASCII and AMTOR transmissions start when commanded by the user or an application program.
ON: Morse, Baudot, ASCII and AMTOR transmissions will not begin until the channel is clear of signals. The channel is considered clear when both the DCD and the Squelch input are inactive. The PERSIST and SLOTTIME delay functions are used if PPERSIST is ON, otherwise the DWAIT time is used.

UBI- 18: OFF: In Packet operation, the FRACK (or FRICK if enabled) timer is used to retry packets that were not acknowledged.
ON: An experimental Master/Slave relationship is established when a Packet connection is made. This is designed for meteor scatter operation and is described in detail under the FRICK command.

UBIT 19: Not used in the PK-232.
UBIT 20: Not used in the PK-232.
UBIT 21: Not used in the PK-232.

UBIT 22: ON In the Packet mode, the PK-232 will respond to the receipt of an UNPROTO frame addressed to QRA by sending an LTNPROTO ID packet frame within 1 to 10 seconds. This feature is compatible with TAPR's ANSWRQTLA command.
OFF: The PK-232 does not respond to UNPROTO frames addressed to QRA.

UBIT settings 23 and above are reserved for future expansion.

Ucmd "n" [x]	Default: 0
Mode: All	Host: UC

Parameters:

"n" - 0 to 4 specifying a User command that may be set.

The UCMD command is similar to the UBIT command. UCMD allows seldom used commands that take numeric arguments (rather than ON/OFF) to be set. Presently the functions controlled by UCMD are Pactor settings that most users will never have to change. Still they are important enough to some users or application programs that we have included them under the umbrella command UCMD.

The following are examples of how to use the UCMD command:

UCMD 2	Returns the present value of UCMD 2.
UCMD 1 3	Sets the function controlled by UCMD I to 3.
UCMD 3 Y	Returns the value of UCMD 3 to its default.
UCMD	Returns the value of the last UCMD value that was accessed.

Listed below are the UCMD functions and the default value that presently has been assigned.

UCMD 0: [x] x = 0-30, default 3.
Sets the number of correct Pactor packets in a row that must be received before generating an automatic request to change from 100 to 200 baud.

UCMD 1: [x] x = 0-30, default 6.
Sets the number of incorrect Pactor packets in a row that must be received before generating an automatic request to change from 200 to 100 baud.

UCMD 2: [x] x 0-9, default 2.
Sets the number of Pactor packets sent in a speed-up attempt.

UCMD 3: [x] x = 0-60, default S.
Sets the maximum number of Memory ARQ Pactor packets that are combined to form one good packet. When this number is exceeded, all stored packets are cleared and Memory ARQ is re-initialized. "UCMD 3 0" disables Memory ARQ.

Unproto call1 [VIA call2[,call3 . . . . , call9]] Default: CQ
Mode: Packet Host: UN

Parameters:

Call1 — Call sign to be placed in the TO address field.
call2-9 — Optional digipeater call list, up to eight calls.

UNPROTO sets the digipeat and destination address fields of packets sent in the unconnected (unprotocol) mode.

Unconnected packets are sent as Unnumbered I-frames (UI frames) with the destination and digipeat fields taken from "call1' through "call9' options. When a destination is not specified, unconnected packets are sent to “CQ” .

Unconnected packets sent from other packet stations can be monitored by setting MONITOR to a value greater than “1” and setting MFROM to ALL.

The UNPROTO path and address is also used for beacon packets.

USers "n" Default; 1
Mode: Packet Host: UR

Parameters:

“n” — 0 to 10 specifies the number of active simultaneous connections that can be established with your PK-232.

USERS affects the way that incoming connect requests are handled. It does not affect the number of connections you initiate with your PK-232. For example:

USERS 0 allows incoming connections on any free logical channel
USERS 1 rejects incoming connections if there are connections on 1 or more logical channels.
USERS 2 rejects incoming connections if there are connections on 2 or more logical channels. And so on, through USERS 10.

USOs ON/OFF Default; OFF
Mode: Baudot RTTY Host: US

Parameters:

ON — Letters (LTRS) case IS forced after receiving a space character.
OFF — Letters (LTRS) is NOT forced after receiving a space character.

Use the USOS Command (UnShift On Space) when you want your PK-232 to automatically change from figures to letters after receiving a space character.

When using Baudot RTTY in poor HF receiving conditions, a received character can be incorrectly interpreted as a FIGURES-SHIFT character, forcing the received data into the wrong case. Many otherwise good characters received after this will be interpreted as figures (numbers and punctuation), not as the letters sent by the distant station. USOS ON helps reduce these receiving errors.

Vhf ON/OFF Default: ON
Mode: Packet Host: VH

Parameters:

ON — Packet tones are shifted 1000 Hz.
OFF — Packet tones are shifted 200 Hz.

Use the VHF Command for immediate software control of the PK-232's modem tones. Changing components or switch settings is not required.

Set VHF ON for VHF operation (default), and set VHF OFF for HF packet operation.
NOTE: Be sure to change HBAUD to 300 bauds when operating below 28 MHz.

WHYnot ON/OFF Default: OFF
Mode: Packet Host: WN

Parameters:

ON — The PK-232 generates a reason why received packets were not displayed.
OFF — This function is disabled.

During packet operation, the PK-232 may receive many packets that are not displayed. Turning WHYNOT on will cause the PK-232 to display a message explaining the reason the received packet was not displayed to the screen. The messages and their meanings are shown below:

PASSALL: The received packet frame had errors, and PASSALL was off, preventing the packet from being displayed to the screen.

DCD Threshold: The Threshold control was set too far counter clockwise. The DCO LED was off when the packet was received.

MONITOR: The MONITOR value was set too low to receive this frame.

MCON: MCON was set too low to receive this type of frame.

MPROTO: MPROTO was set to off, and the received packet was probably a NET/ROM or TCP/IP frame.

MFROM/MTO: The frame was blocked by the MFROM or MTO command.

MBX: The call sign of the sending station does not match the call sign setting in the MBX command.

MBX Sequence: The frame was received out of sequence, probably a retry.

Frame too long: Incoming packet frame longer than 330 bytes. Probably a non-AX.25 frame.

Frame too short: Incoming packet frame shorter than 15 bytes. Only seen if PASSALL ON. Probably noise.

RX overrun: Another HDLC byte was received before we could read the previous one out of the HDLC chip.

Wideshft ON/OFF Default: OFF
Mode: Baudot/ASCII RTTY/AMTOR/Pactor Host: WI

Parameters:

ON — RTTY tones are shifted 1000 Hz.
OFF — RTTY tones are shifted 200 Hz (emulates 170-Hz shift).

The WIDESHFT command permits the use of the PK-232 on VHF or HF with either wide (1000 Hz) or narrow (200 Hz) shifts. Many amateur radio VHF and HF RTTY operators use 170 Hz shift. The PK-232's 200 Hz shift is well within the filter tolerances of any RTTY demodulator in general service. MARS stations will find WIDESHFT generally compatible with MARS and commercial 850 Hz shift RTTY operations.

WOrdout ON/OFF Default: OFF
Mode: Baudot, ASCII, AMTOR, Pactor and Morse Host: WO

Parameters:

ON — Typed characters are held in the transmit buffer until a space, CR, LF, TAB, RECEIVE, CWID, ENQ or +? characters(s) is typed.
OFF — Typed characters are sent directly to the transmitter.

Use the WORDOUT Command to choose whether or not you can edit while entering text for transmission.

When WORDOUT is on, each character you type is held in a buffer until space, a carriage return, a line fed, ENQ character ($05, <CTRL-E->) or the +?. You can edit words before the transmit buffer's contents are sent to the radio. When WORDOUT is OFF, each character you type is sent to the radio just as you typed it, without any delay.

WRu ON/OFF Default: OFF
Mode: Baudot, ASCII Host: WR

Parameters:

ON — Your Auto-AnswerBack is sent after a distant station's WRU?
OFF — Your Auto-AnswerBack is NOT sent after a distant station's WRU?

Use the WRU command in Baudot and ASCII to enable or disable your PK-232's Automatic-AnswerBack feature.

When WRU is ON, your PK-232 sends the AnswerBack on receipt of a distant station's WRU? reqruest (“FIGS-D” or '$' in Baudot or a <CTRL-E> in ASCII). Your PK-232 keys your transmitter, sends the text stored in the AnswerBack field (AAB), then unkeys your transmitter and returns to receive.
The WRU function is defaulted ON in AMTOR as per the CCIR recommendation. To allow for special applications where it may be helpful to disable the WRU function in AMTOR. UBIT 9 or bit 9 of the CUSTOM command controls this feature.

XBaud "n" Default: 0
Mode: ASCII/Baudot Host: XB

Parameters:

”n” — Specifies an exact baud rate used in receiving ASCII and Baudot RTTY.

XBAUD enables hardware decoding of ASCII and Baudot signals using the PK-232's 8530 Serial Communications Controller IC. This can allow the PK-232 to achieve better copy of these signals as well as allow non-standard data rates to be received. One disadvantage of XBAUD is that the software commands RXREV and TXREV can not be used to invert the data so the correct sideband must be used.

To use XBAUD simply enter the data rate that is desired in either ASCII or Baudot modes. For example a 20-meter Baudot RTTY enthusiast may want to set XBAUD to 45 to improve copy of weak signals on the band.

It is important to remember that XBAUD overrides both the RBAUD (in Baudot) and ABAUD (in ASCII) as well as the inverting commands TXREV and RXREV. This means that if XBAUD has been set to 45 for Baudot operation, it should be reset to 0 before changing modes to ASCII. Otherwise the PK-232 will attempt to receive ASCII at 45 bauds! To help reduce the chance of this error occurring, the PK232 will disable XBAUD by setting it to 0 every time the SIGNAL Identification mode is used and the command OK is entered.

The XBAUD command supports data rates from 1 to 9600 bits per second although the PK-232 internal modem only supports data rates to 1200 baud.

IFlow ON/OFF Default: ON
Mode: All Host: XW

Parameters:

ON — XCN/XOFF (software) flow control is activated.
OFF — XON/XOFF flow control is disabled - hardware flow control is enabled.

When XFLOW is ON, software flow control is in effect - it's assumed that the computer or terminal will respond to the PK-232's Start and Stop characters defined by the XON and XOFF commands. Similarly, the PK-232 will respond to the computer’s start and stop characters defined by START and STOP.

When XFLOW is OFF, the PK-232 sends hardware flow control commands via the CTS and is controlled via either the RTS or the DTR line.

Xmit — Immediate Command
Mode: Baudot/ASCII/Morse and FAX — Host: XM

XMIT is an immediate command that keys your radio's PTT line and prepares the radio to receive outbound data and Morse characters from the PK-232. The XMIT Command can only be used from the Command Mode.

XMIT switches your PK-232 to either Converse Mode or Transparent Mode, depending on the setting of CONMODE. Typing the CWID or the RECEIVE character will return you to receive. Typing RCVE from the Command mode will also return to receive.

XMITok ON/OFF — Default: ON
Mode: All — Host: XO

Parameters:

ON — Transmit functions (PTT line) are active.
OFF — Transmit functions (PTT line) are disabled.

When XMITOK is OFF, the PTT line to your transmitter is disabled - the transmit function is inhibited. All other PK-232 functions remain the same. Your PK-232 generates and sends packets as requested, but does not key the radio's PTT line.

Use the XMITOK command at any time to ensure that your PK-232 does not transmit. Turning XMITOK OFF can help enable full break-in CW (QSK) on certain transceivers.

XOFF "n" — Default:$131 <CTRL-S>
Mode: All — Host: XF

Parameters:

"n" — 0 to $7F (0 to 127 decimal) specifies an ASCII character code.

Use XOFF to select the Stop character to be used to stop input from the computer or terminal.

The Stop character default value is <CTRL-S> for computer data transfers.

XON "n" — Default: $11 <CTRL-Q>
Mode: All — Host: XN

Parameters:

"n" — 0 to $7F (0 to 127 decimal) specifies an ASCII character code.

XON selects the PK-232 Start character that is sent to the computer or terminal to restart input from that device.

The start character default value is <CTRL-Q> for computer data transfers.

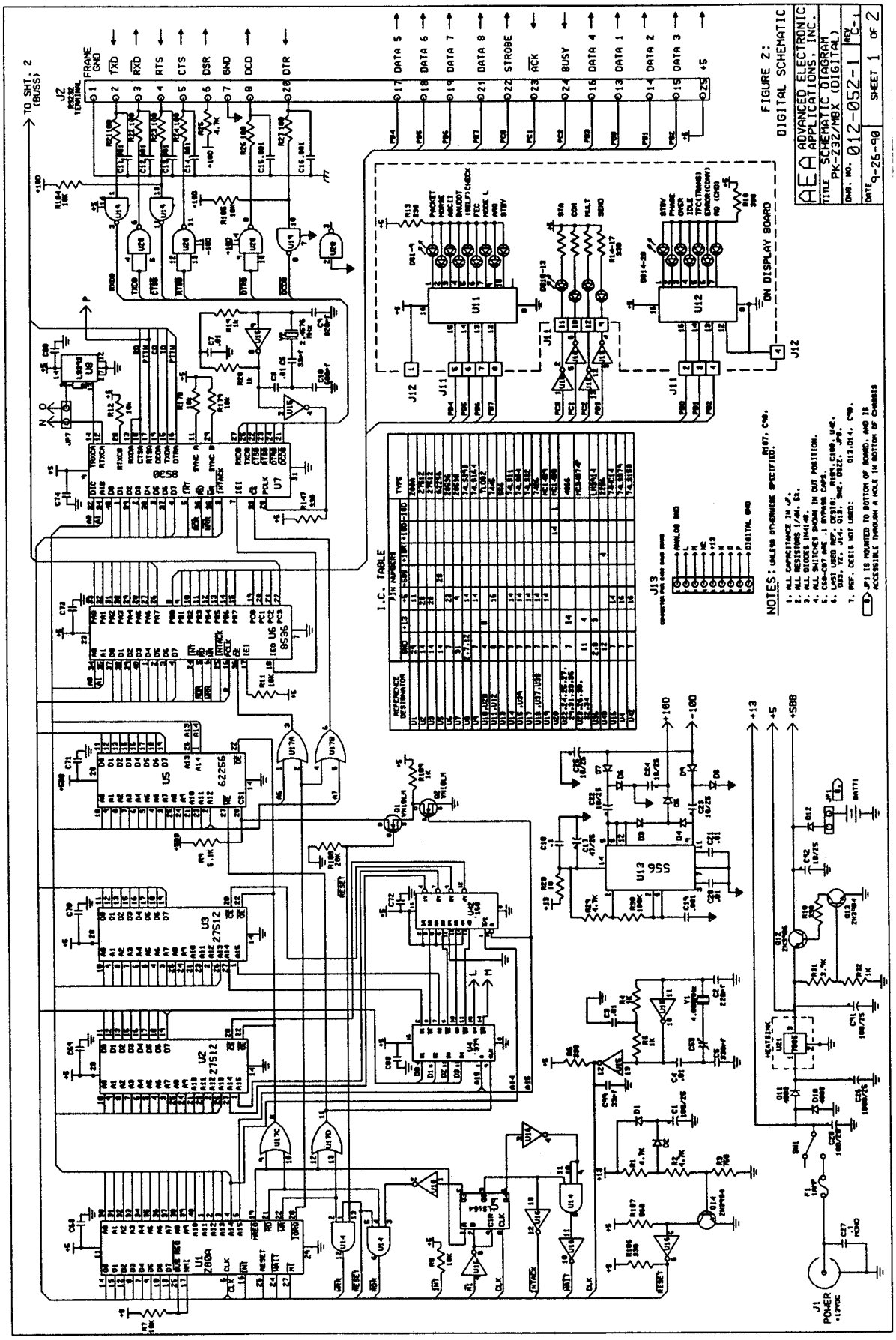
FIGURE 2:
DIGITAL SCHEMATIC
ADVANCED ELECTRONIC APPLICATIONS, INC.
SCHEMATIC DIAGRAM
PK-232/MBX (DIGITAL)
012-052-1
9-26-90
SHEET 1 OF 2
I.C. TABLE
NOTES:
ON DISPLAY BOARD
TO SHT. 2 (BUSS)
DATA 5
DATA 6
DATA 7
DATA 8
STROBE
ACK
BUSY
DATA 4
DATA 1
DATA 2
DATA 3
+5
FRAME GND
TXD
RXD
RTS
CTS
DSR
GND
DCD
DTR
J1 POWER

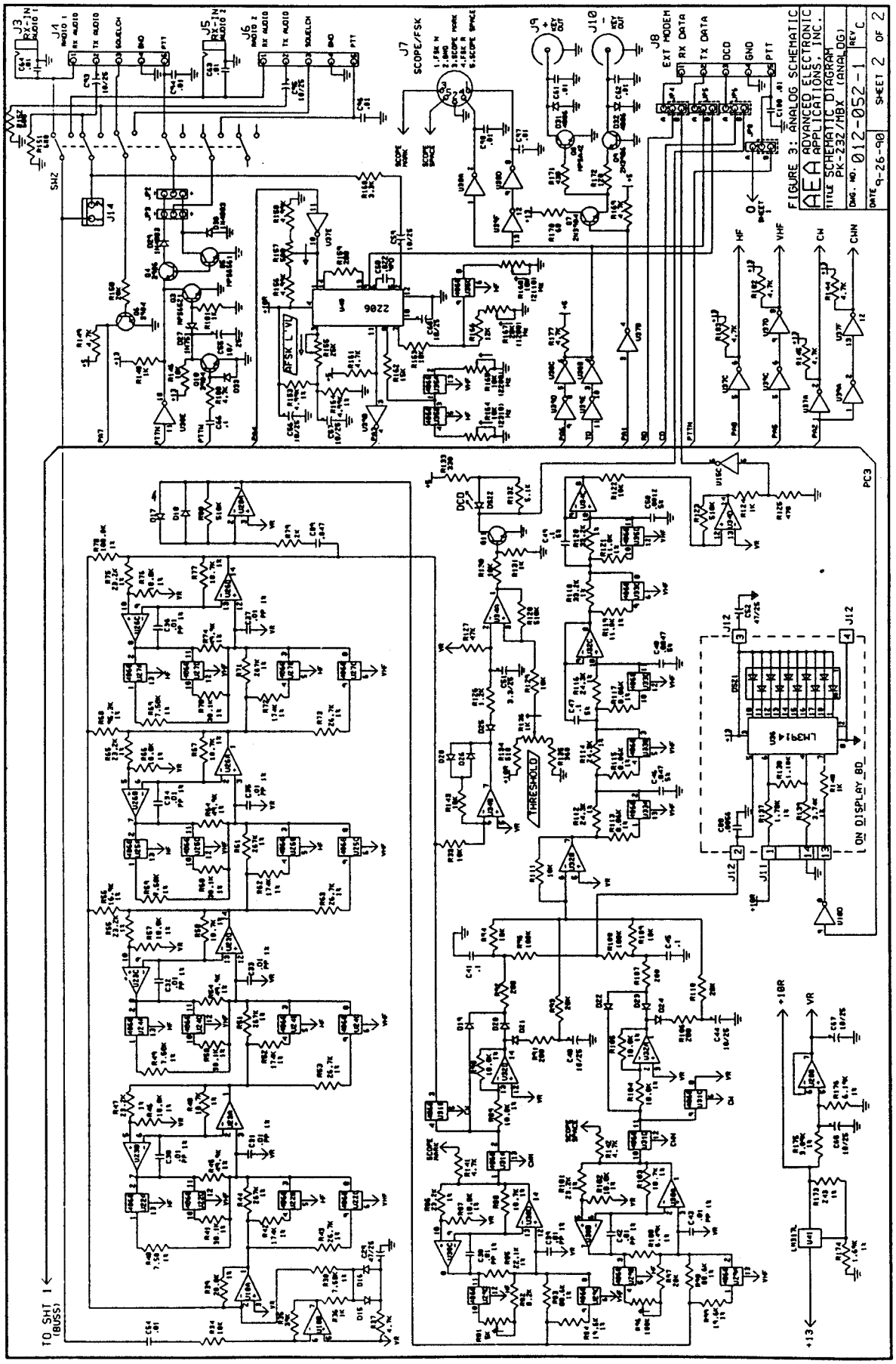
FIGURE 3: ANALOG SCHEMATIC
AEA ADVANCED ELECTRONIC APPLICATIONS, INC.
TITLE SCHEMATIC DIAGRAM PK-232/MBX (ANALOG)
DWG. NO. 012-052-1
REV C
DATE 9-26-90
SHEET 2 OF 2
J3 RX-IN AUDIO 1
J4 RX AUDIO
TX AUDIO
SQUELCH
GND
PTT
J5 RX-IN AUDIO 2
J6 RX AUDIO
TX AUDIO
SQUELCH
GND
PTT
J7 SCOPE/FSK
J9 KEY OUT
J10 KEY OUT
J8 EXT MODEM
RX DATA
TX DATA
DCD
GND
PTT
J14
SW2
AFSK L'VL
2206
THRESHOLD
LM3914
ON DISPLAY BD
J12
J11
PC3
HF
VHF
CW
CWN
+18R
VR
+13
TO SHT 1 (BUSS)

APPENDIX C

PARTS PICTORIAL

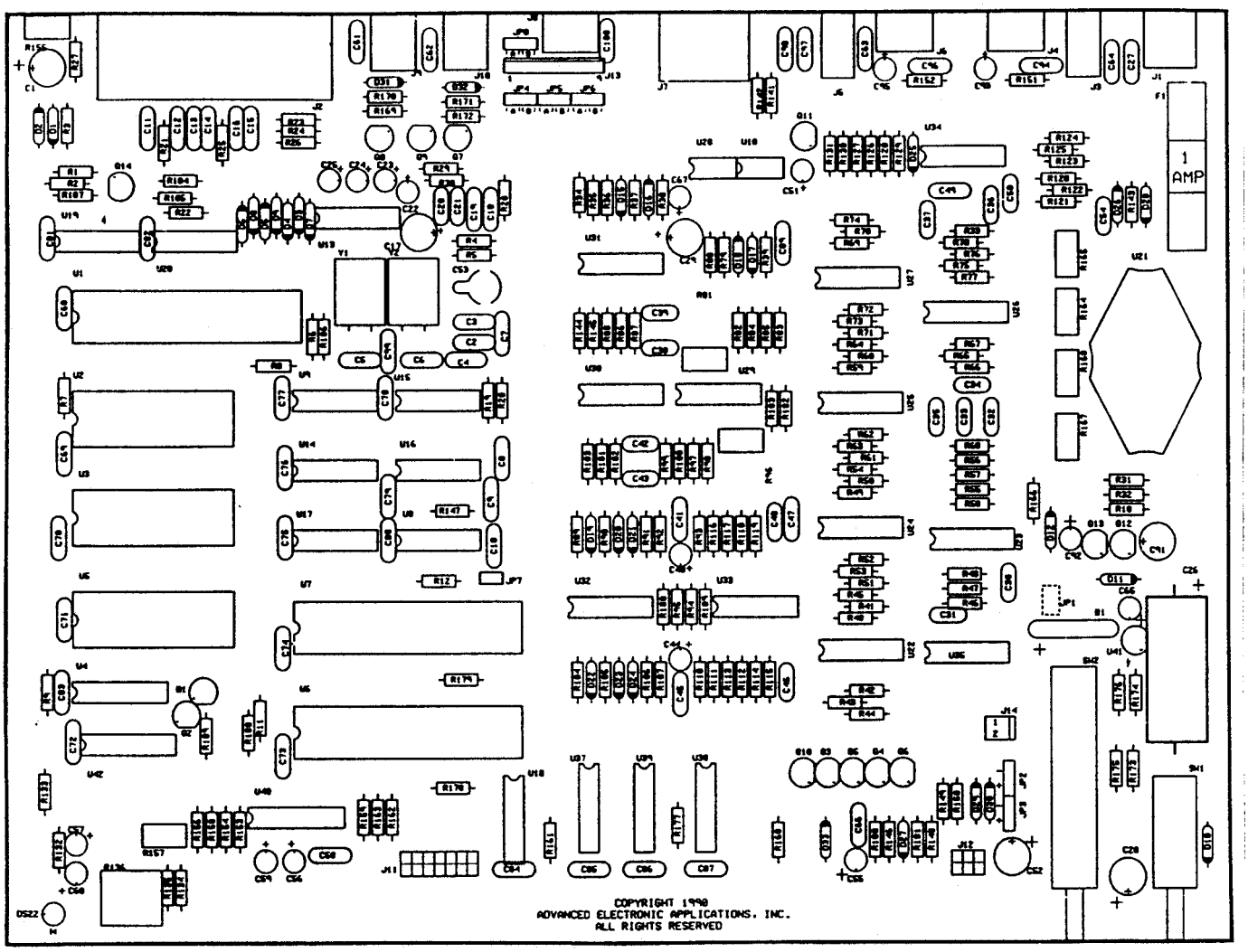

MAIN BOARD

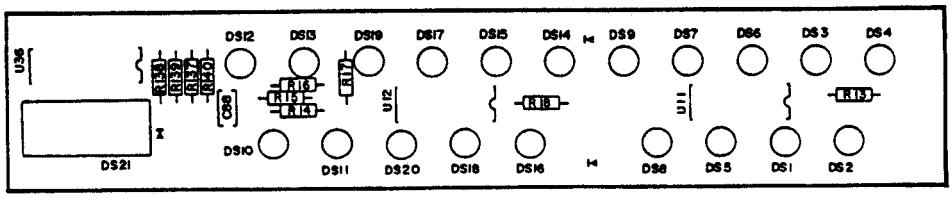

DISPLAY BOARD

PARTS LIST

AEA P/N	REF. DESIG.	DESCRIPTION
110-103	C20,C21	CAP MY 103P
110-104	C18,C41,C45	CAP MY .1UF
110-473	C89	CAP MY 473P
110-562	C88	CAP MY 562P
111-103	C54	CAP MY 103P
111-104	C47,C49	CAP MY 104P
112-122	C50	CAP MY 122P
112-473	C46	CAP MY 473P
120-223	C58	CAP CER 223 PF
121-102	C11-C16,C19	CAP CR .001UF
121-103	C3,C7,C63,C64	CAP CR .01UF
	C8,C4,C94,C96	
	C97,C98,C100	
121-330	C99	CAP CR 33PF
124-104	C27,C66	CAP MONO .1 UF
	C68-C87	
122-103	C61,C62	CAP CR 103P
125-540	C53	CAP VAR 5-40
130-106	C22-C25,C40	CAP EL 10MF
	C44,C55-C57	
	C59,C60,C65	
	C67,C92,C93	
	C95	
130-107	C28,C1,C91	CAP EL 100UF
130-335	C51	CAP EL 335P
130-486	C17,C29,C52	CAP EL 47MF
131-108	C26	CAP EL 108P
132-400	C48	CAP PP 472P
135-103	C30-C39,C42	CAP PP 103P
	C43	
150-221	C2	CAP SM 220P
150-330	C6	CAP SM 33P
150-331	C5	CAP SM 330P
150-681	C10	CAP SM 680P
150-821	C9	CAP SM 820P
210-100	R28	RES 1/4W 5% 10.00
210-101	R21-R24,R26	RES 1/4W 5% 100.00
	R27	
210-102	R4,R5,R19	RES 1/4W 5% 1.00K
	R20,R36,R32	
	R131,R148,R124	
	R181,R140,R189	
210-103	R7,R8,R11,R12	RES 1/4W 5% 10.00K
	R94,R109,R111	
	R122,R129,R130	
	R146,R178,R179	
	R33,R34,R143	
	R184,R185	
210-104	R30,R108,R95	RES 1/4W 5% 100.00K
210-121	R172	RES 1/4W 5% 120.00
210-122	R126	RES 1/4W 5% 1.20K
210-123	R166	RES 1/4W 5% 12.00K
210-153	R162	RES 1/4W 5% 15.00K
210-183	R163	RES 1/4W 5% 18.00K
210-201	R106,R107,R159	RES 1/4W 5% 200.00
	R91,R92	
210-202	R79	RES 1/4W 5% 2.00K
210-203	R110,R150,R97	RES 1/4W 5% 20.00K
	R93,R188	
210-331	R6,R10,R133	RES 1/4W 5% 330.00
	R186,R147,	
	R13-R18	
210-332	R160	RES 1/4W 5% 3.30K
210-361	R135	RES 1/4W 5% 360.00
210-392	R31	RES 1/4W 5% 3.90K
210-393	R35	RES 1/4W 5% 39.00K
210-431	R171	RES 1/4W 5% 430.00
210-471	R125	RES 1/4W 5% 470.00
210-472	R1,R2,R25,R29	RES 1/4W 5% 4.70K
	R37,R141,R142	

AEA P/N	REF. DESIG.	DESCRIPTION
	R149,R161,R144	
	R145,R169,R177	
	R182,R183,R180	
210-473	R127	RES 1/4W 5% 47.00K
210-511	R134	RES 1/4W 5% 510.00
210-512	R9,R132	RES 1/4W 5% 5.10K
210-514	R80,R128,R123	RES 1/4W 5% 510.00K
210-561	R187	RES 1/4W 5% 560.00
210-680	R170	RES 1/4W 5% 68.00
210-681	R151,R152	RES 1/4W 5% 680.00
210-751	R3	RES 1/4W 5% 750.00
210-822	R82	RES 1/4W 5% 8.20K
211-1002	R46,R57,R66	RES 1/4W 1% 10.00K
	R76,R87,R89,R90	
	R102,R104,R105	
211-1003	R78	RES 1/4W 1% 100.00K
211-1101	R138	RES 1/4W 1% 1.10K
211-1102	R119,R121	RES 1/4W 1% 11.00K
211-1691	R174	RES 1/4W 1% 1.69K
211-1692	R56	RES 1/4W 1% 16.90K
211-1781	R137	RES 1/4W 1% 1.78K
211-1743	R42,R52,R62	RES 1/4W 1% 174.00K
	R72	
211-1872	R48,R58,R67	RES 1/4W 1% 18.70K
	R77,R103,R88	
211-1962	R84,R99	RES 1/4W 1% 19.60K
211-2002	R39	RES 1/4W 1% 20.00K
211-2212	R85	RES 1/4W 1% 22.10K
211-2322	R47,R55,R65	RES 1/4W 1% 23.20K
	R75,R86,R101	
211-2430	R173	RES 1/4W 1% 243.00
211-2432	R112,R114,R116	RES 1/4W 1% 24.30K
211-2673	R44,R51,R61	RES 1/4W 1% 267.00K
	R71	
211-2672	R43,R53,R63	RES 1/4W 1% 26.70K
	R73	
211-3091	R175	RES 1/4W 1% 3.09K
211-3012	R41,R50,R60	RES 1/4W 1% 30.10K
	R70	
211-3322	R118,R120	RES 1/4W 1% 33.20K
211-3741	R139	RES 1/4W 1% 3.74K
211-4991	R153,R154,R156	RES 1/4W 1% 4.99K
	R158	
211-4992	R45,R54,R64	RES 1/4W 1% 49.90K
	R74	
211-6191	R176	RES 1/4W 1% 6.19K
211-6491	R100	RES 1/4W 1% 6.49K
211-7501	R40,R49,R59	RES 1/4W 1% 7.50K
	R69,R38	
211-8061	R113,R115,R117	RES 1/4W 1% 8.06K
211-8062	R83,R98	RES 1/4W 1% 80.60K
211-9532	R68	RES 1/4W 1% 95.30K
250-106	R136	PNL POT .625 SQ 1K
264-103	R164,R165,R168	POT TRIM 10K
264-104	R96	POT TRIM 100K
264-203	R167	POT TRIM 20K
264-253	R155	POT TRIM 25K
264-501	R157	POT TRIM 500
264-502	R81	POT TRIM 5K
310-001	D1-D9,D15-26	DIODE SIG 1N4448
	D28,D33,D12	
311-003	D10,D11,D29	DIODE PWR 1N4003
	D30	
311-006	D31,D32	DIODE PWR 1N4006
312-471	D27	DIODE ZNR 1N751
314-010	DS21	LED 10 SEG BARGRAP
314-300	DS12,DS13,DS15	LED RED KEYER
	DS22	
314-301	DS1-DS9,DS14	LED YEL KEYER

	DS16-DS20	
314-302	DS10,DS11	LED GRN KEYER
320-001	Q6,Q7,Q10,Q11	XISTOR NPN 2N3904
	Q13,Q14	
320-010	Q8	XISTOR NPN MPSA42
320-011	Q3	XISTOR NPN MPS6521
320-012	Q5	XISTOR NPN MPS6560
320-202	Q1,Q2	XISTOR PFET VN10LM
320-501	Q4,Q9,Q12	XISTOR PNP 2N3906
330-001	U21	IC 7805
330-008	U41	IC LM317L
330-011	U13	IC NE556N
330-016	U28,U10	IC XR082CP
330-018	U23,U26,U30	IC MC34074P
	U32,U34	
330-034	U40	IC XR2206
330-050	U36	IC LM3914
331-004-1	U15,U39	IC 74LS04
331-006	U18,U37,U38	TI SN7406N
331-011-1	U14	IC 74LS11
331-014-1	U16	IC 74HC14
331-032-1	U17	IC 74LS32
331-045	U11,U12	IC 7445
331-158	U42	IC 74LS158331-164-1 U9
IC 74LS164		
331-379	U4	IC 74LS379
331-393	U8	IC 74LS393
332-432	U5	IC D43256 SRAM
332-512	U2,U3	IC 27512
333-015	U1	IC Z80A CPU
333-018	U7	IC Z8530/Z8530A
333-019	U6	IC Z8536
334-066	U22,U24,U25	IC 4066B
	U27,U29,U31	
	U33,U35	
350-488	U20	IC MC1488
350-489	U19	IC MC1489
400-014	U19,U20	DIP SOCK 14 PIN
400-020	DS21	DIP SOCK 20 PIN
400-028	U2,U3,U5	DIP SOCK 28 PIN
400-040	U1,U6,U7	DIP SOCK 40 PIN
410-102-1	J14	LOK HDR STR .100 2P
410-109	JP4,5,6	HDR STR.10 9 POS
410-003	J12	HDR R/AX2.10 3 POS
410-005	J4,J6,J8	HDR R/A.10 5 POS
410-007	J11	HDR R/AX2.10 7 POS
410-102	JP1,JP8,JP7	HDR STR.10 2 POS
410-103	JP2,JP3	HDR STR .10 3 POS
410-109-1	J13	LOK HDR STR.100 9P
412-125	J2	HDR R/A 'D' F/M DB25
420-008-1	J10,J9	JACK PHONO
420-001	J1	JACK PWR 2.1MM
420-002	J3,J5	JACK PHON 3.5MM
420-039	J7	CONN R/A DIN 5 PIN
500-002	SW1	SW P-P 2P2T
500-006	SW2	SW P-P 6P2T
650-245	Y2	X-TAL 2.4576 MHZ
650-405	Y1	X-TAL 4.000 MHZ
700-127	STAND/OFFS	SCRW PHP ZK 6-32X1/4
701-137	HEATSINK & J2	SCRW PHP NK 4-40X3/8
710-004	HEATSINK & J2	NUT HEX 4-40
720-004	U21	WASHER INT STR #4
730-032	HEATSINK S/O	HEX AL 4-40 X 1/2"
730-020	S/O	HEX AL 6-32X1/2
740-045	DS22	S/O NY LED 0.125
750-019	U21	HEATSINK THM 6019B
760-000	SW1,SW2	KNOB SW GRY .4 X.2
762-003	F1	FUSE CLIP PCB
762-105	B1	BAT VERT LITH PCB 3V
763-001	F1	FUSE 1 AMP- AGC
779-001	JP1,JP4,JP5	SHORT PLUG .10
	JP6,JP7,JP8	
	JP9,JP2,JP3	

APPENDIX E - SPECIFIC RADIO CONNECTIONS

This appendix provides radio connection information from your AEA data controller to approximately 400 different models of amateur transceivers.

Each radio listed references a connection figure and possibly a note on connections. Notes are below on this page. Connection figures appear following the table of radios. All PIN type wiring connections are viewed from wiring/solder side of plug.

The wire colors used on the diagrams refer to the wires in the radio cables supplied with your AEA data controller. The standard minimum configuration will allow operating of all HF modes with your radio set for SSB operation. When wiring information refers to FSK connections, these connections allow you to operate your radio in the RTTY or FSK mode, and usually results in a purer transmitted signal and usually allow using narrow fitters not always available when the radio is set for SSB operation.

Radio Connection Notes

Note 1 Receive audio is not available on the microphone jack of all radios. If you make this connection and are unable to receive, use the speaker jack on the rear panel of the radio as a source of receive audio.

Note 2 Your radio may not require a plug with 3 connections, i.e. tip, ring, and sleeve. We suggest you use the 3conductor "stereo" plug wired as shown so that if you change radios in the future to another model with this same connections scheme, your cable will be compatible without modification.

Note 3 Older Icom transceivers which use the 8-pin microphone plug may not have receive audio connected to the microphone jack on pin 8. In this case pin 8 is unused. We suggest you make the connection as diagrammed even if your radio does not have receive audio available at pin 8, so that if you change to a newer model Icom radio the cable will be ready to use without modifications. If you make this connection and are unable to receive, use the speaker jack on the rear panel of the radio as a source of receive audio.

Note 4 If you have difficulty in locating an 8-pin DIN plug for this connection, a 5-pin DIN may be used in its place. A 5-pin DIN has all the required pins for connections to Icom HF rigs, because pins 6, 7, and 8 are not used. The numbering and arrangement of the remaining pins is unchanged.

Note 5 In most Ten-Tec radios where an FSK input is provided, a pull-up resistor to a positive power source is required to produce proper function of the FSK keyer in the radio. Contact Ten-Tec for recommendations on how to add this resistor to the radio to which you are connecting.

Note 6 This connection only valid with PCB-88, PK-96, DSP-1232, DSP-2232, and PK-900 Radio Port 2 only. This connection is also appropriate for use at 9600 baud applications with radio in DATA mode.

Note 7 This connection only valid with PCB-88, PK-96, DSP-1232, DSP-2232, and PK-900 Radio Port 2 only.

Note 8 This radio uses negative push-to-talk signaling. Change the appropriate keying polarity jumper in the data controller. See installation chapter for details.

Note 9 **Based** on our experiences with this radio and its RF susceptibility we recommend using this connection diagram if you choose to use **the ACC2 connector.** This radio has shown susceptibility to entry of RF on pin 11 of the ACC2 connector, so we do not connect the AFSK (White wire) in this diagram. Use the FSK mode of this radio when you wish to operate data modes.

SPECIFIC RADIO CONNECTIONS

ALINCO	Figure	Note
ALD-24T	1	
ALR-22HT	1	
ALR-22T	1	
ALR-72T	1	
DJ-100	45	
DJ-120T	45	
DJ-160T	5	2
DJ-162T	5	2
DJ-180T	5	2
DJ-200	45	
DJ-500	45	
DJ-560T	5	2
DJ-580T	5	2
DJ-F1T	5	2
DJ-G1T	5	2
DR-110T	1	1
DR-112T	1	1
DR-119T	2	1
DR-1200T	2	1
DR-130T	50	1
DR-430T	1	1
DR-510T	1	1
DR-570T	1	1
DR-590T	3	1
DR-592T	3	1
DR-599T	3	1
DR-600T	3	1

AZDEN	Figure	Note
All W/ 12-PIN CONN	46	
All W/8-PIN AMP	4	
PCS-2000	46	
PCS-5000	4	
PCS-6000	4	
PCS-7000	4	

COLLINS	Figure	Note
KWM-380	6	

DRAKE	Figure	Note
T4X	8	8
T4XB	8	8
T4XC	8	
TR-22	7	
TR-3	8	
TR-33	7	
TR-4	8	8
TR-4C	8	8
TR-4CW	8	
TR-6	8	8
TR-7	7	
UV-3	7	

ICOM	Figure	Note
IC-02 SERIES	5	2
IC-03 SERIES	5	2
IC-04 SERIES	5	2
IC-12	5	2
IC-120	12	3
IC-1201	12	3
IC-1271 SERIES	12	3
IC 1275 SERIES	12	3
IC-12G SERIES	5	2
IC-2 SERIES	5	2
IC-20	10	
IC-202	11	
IC-21	10	
IC-211	15	
IC-215	11	
IC-22	10	
IC-228 SERIES	12	3
IC-229 SERIES	49	
IC-22A	10	
IC-22S	11	
IC-22U	12	3
IC-230	10	
IC-2330 SERIES	49	
IC-2400	12	3
IC-2410 SERIES	49	
IC-245	11	
IC-24AT	5	2
IC-25 SERIES	12	3
IC-2500	12	3
IC-251	15	
IC-255	12	3
IC-255	14	
IC-260	12	3
IC-260	14	
IC-27 SERIES	12	3
IC-271 SERIES	12	3
IC-275 SERIES	12	3
IC-28 SERIES	12	3
IC-280	11	
IC-281	51	
IC-281	52	6
IC-290 SERIES	12	3
IC-2G SERIES	5	2
IC-2GX	5	2
IC-21 SERIES	5	2
IC-2S SERIES	5	2
IC-2SR SERIES	9	
IC-3SERIES	5	2
IC-30	10	

IC-3200 SERIES	12	3
IC-3210 SERIES	12	3
IC-3220 SERIES	12	3
IC-3230 SERIES	49	
IC-375 SERIES	12	3
IC-37A	12	3
IC-38A	12	3
IC-3S SERIES	5	2
IC-4 SERIES	5	2
IC-402	11	
IC-449 SERIES	49	
IC-45 SERIES	12	3
IC-451	15	
IC-47 SERIES	12	3
IC-471 SERIES	12	3
IC-475 SERIES	12	3
IC-48 SERIES	12	3
IC-490 SERIES	12	3
IC-4G SERIES	5	2
IC-4S SERIES	5	2
IC-4SR SERIES	9	
IC-502	11	
IC-505	12	3
IC-551 SERIES	12	3
IC-551 SERIES	15	
IC-560	12	3
IC-575	12	
IC-575 SERIES	12	3
IC-60	10	
IC-707	12	3
IC-720	12	3
IC-720A	15	
IC-725	12	3
IC-725	16	4
IC-726	12	3
IC-726	16	4
IC-728	12	3
IC-728	16	
IC-729	12	3
IC-729	16	
IC-730	12	3
IC-735	12	3
IC-735	16	4
IC-737	12	3
IC-737	16	
IC-740	12	3
IC-740	13	
IC-745	12	3
IC-745	13	
IC-751	12	3
IC-751	13	
IC-761	12	3
IC-761	17	4

IC-765	12	3
IC-765	17	4
IC-781	12	3
IC-781	17	4
IC-901	12	3
IC-970	16	4
IC-D1A	9	
IC-P2 SERIES	5	2
IC-P3 SERIES	5	2
IC-P4 SERIES	5	2
IC-U2 SERIES	5	2
IC-U4 SERIES	5	2
IC-V21 SERIES	5	2
IC-W21 SERIES	5	2
IC-W2A	9	
IC-X21 SERIES	5	2
IC-X2A	9	
KANTRONICS	**Figure**	**Note**
D4-10	43	
DVR 2-2	43	
KENWOOD	**Figure**	**Note**
TH-205	31	
TH-21	31	
TH-215	31	
TH-22	31	
TH-225	31	
TH-25	31	
TH-27	31	
TH-28	31	
TH-31	31	
TH-315	31	
TH-41	31	
TH-42	31	
TH-45	31	
TH-47	31	
TH-48	31	
TH-75	31	
TH-77	31	
TH-78	31	
TM-201	3	
TM-221	3	
TM-231	3	
TM-231	53	7
TM-241	3	
TM-241	53	7
TM-2530	3	
TM-2550	3	
TM-2570	3	
TM-321	3	
TM-331	3	
TM-331	53	7
TM-3530	3	
TM-401	3	

TM-421	3	
TM-431	53	7
TM-441	3	
TM-531	3	
TM-531	53	7
TM-541	3	
TM-621	3	
TM-631	3	
TM-631	53	7
TM-641	47	
TM-701	53	7
TM-721	3	
TM-731	3	
TM-731	53	7
TM-732	47	
TM-741	47	
TM-742	47	
TM-941	47	
TM-942	47	
TR-2200	11	
TR-2300	11	
TR-2400	33	
TR-2500	32	
TR-2600	31	
TR-3200	3	
TR-50	3	
TR-7400	11	
TR-7500	32	
TR-751	3	
TR-7600	37	
TR-7730	36	
TR-7750	36	
TR-7800	36	
TR-7850	36	
TR-7930	36	
TR-7950	36	
TR-851	3	
TR-9000	36	
TR-9130	36	
TR-9500	36	
TS-120	11	
TS-130	11	
TS-140	3	
TS-140	35	
TS-430	3	
TS-440	3	
TS-440	34	
TS-450	3	
TS-450	38	
TS-450	54	9
TS-490	11	
TS-50	39	
TS-50	53	7

TS-520	11	
TS-530	11	
TS-60	39	
TS-60	53	7
TS-670	3	
TS-680	3	
TS-680	35	
TS-690	3	
TS-690	35	
TS-700	11	
TS-701	3	
TS-711	3	
TS-711	34	
TS-780	3	
TS-790	3	
TS-790	35	
TS-811	3	
TS-811	34	
TS-820	11	
TS-830	11	
TS-850	3	
TS-850	39	
TS-850	55	9
TS-900	11	
TS-930	3	
TS-940	3	
TS-940	34	
TS-940	56	9
TS-950	3	
TS-950	39	
TW-4000	3	
TW-4100	3	
RADIO SHACK	**Figure**	**Note**
HTX-100	2	
HTX-202	5	2
HTX-404	5	2
RANGER	**Figure**	**Note**
AR-2500	44	
STANDARD	**Figure**	**Note**
C-128	5	2
C-168	5	2
C-188	5	2
C-228	5	2
C-288	5	2
C-468	5	2
C-468	5	2
C-488	5	2
C-500	5	2
C-528	5	2
C-558	5	2
C-628	5	2
TEN-TEC	**Figure**	**Note**

All W/ 4-PIN AMP	41	5
ALL W/.25” PLUG	42	
ARGONAUT II	41	
DELTA II	41	
PARAGON	41	5
UNIDEN	**Figure**	**Note**
HR-2510	40	
HR-2600	40	
WILSON	**Figure**	**Note**
MARK II	29	
MARK IV	29	
WE-800	29	
YAESU	**Figure**	**Note**
CPU-2500	28	
FT-1	18	
FT-1	20	
FT-1000 SERIES	18	
FT-1000 SERIES	20	
FT-101	22	
FT-101B	22	
FT-101E	22	
FT-101EE	22	
FT-101EX	22	
FT-101ZD	22	
FT-102	18	
FT-103R	5	2
FT-107	18	
FT-109	5	2
FT-11	5	2
FT-200	23	
FT-203	5	2
FT-207	29	
FT-208	29	
FT-209	5	2
FT-211	18	
FT-211RH	27	
FT-212RH	27	
FT-2200	18	
FT-221	22	
FT-227	22	
FT-23	5	2
FT-230	26	
FT-231R	27	
FT-2400	30	
FT-26	5	2
FT-270	26	
FT-2700	27	
FT-290 MK I	26	
FT-290 MK II	18	
FT-290 MK II	27	
FT-2F	22	
FT-311RM	27	
FT-33	5	2
FT-41	5	2
FT-411	5	2
FT-415	5	2
FT-416	5	2
FT-470	5	2
FT-4700	27	
FT-480	18	
FT-5100	18	
FT-5100	48	
FT-5200	27	
FT-530	5	2
FT-6200	27	
FT-650	18	
FT-690 MK I	26	
FT-690 MK II	18	
FT-690 MK II	27	
FT-703	5	2
FT-707	18	
FT-708	29	
FT-709	5	2
FT-711RH	27	
FT-712	18	
FT-7200	18	
FT-726	18	
FT-727	5	2
FT-73	5	2
FT-730	26	
FT-736	18	
FT-736	25	
FT-7400	30	
FT-747	18	
FT-757	18	
FT-757	19	
FT-76	5	2
FT-767	18	
FT-767	19	
FT-767	24	
FT-77	18	
FT-790 MK I	26	
FT-790 MK II	18	
FT-790 MK II	27	
FT-811	5	2
FT-815	5	2
FT-816	5	2
FT-840 SERIES	18	
FT-890	18	
FT-901	22	
FT-902	22	
FT-911	5	2
FT-912	18	
FT-980	18	
FT-990 SERIES	18	
FT-990 SERIES	21	

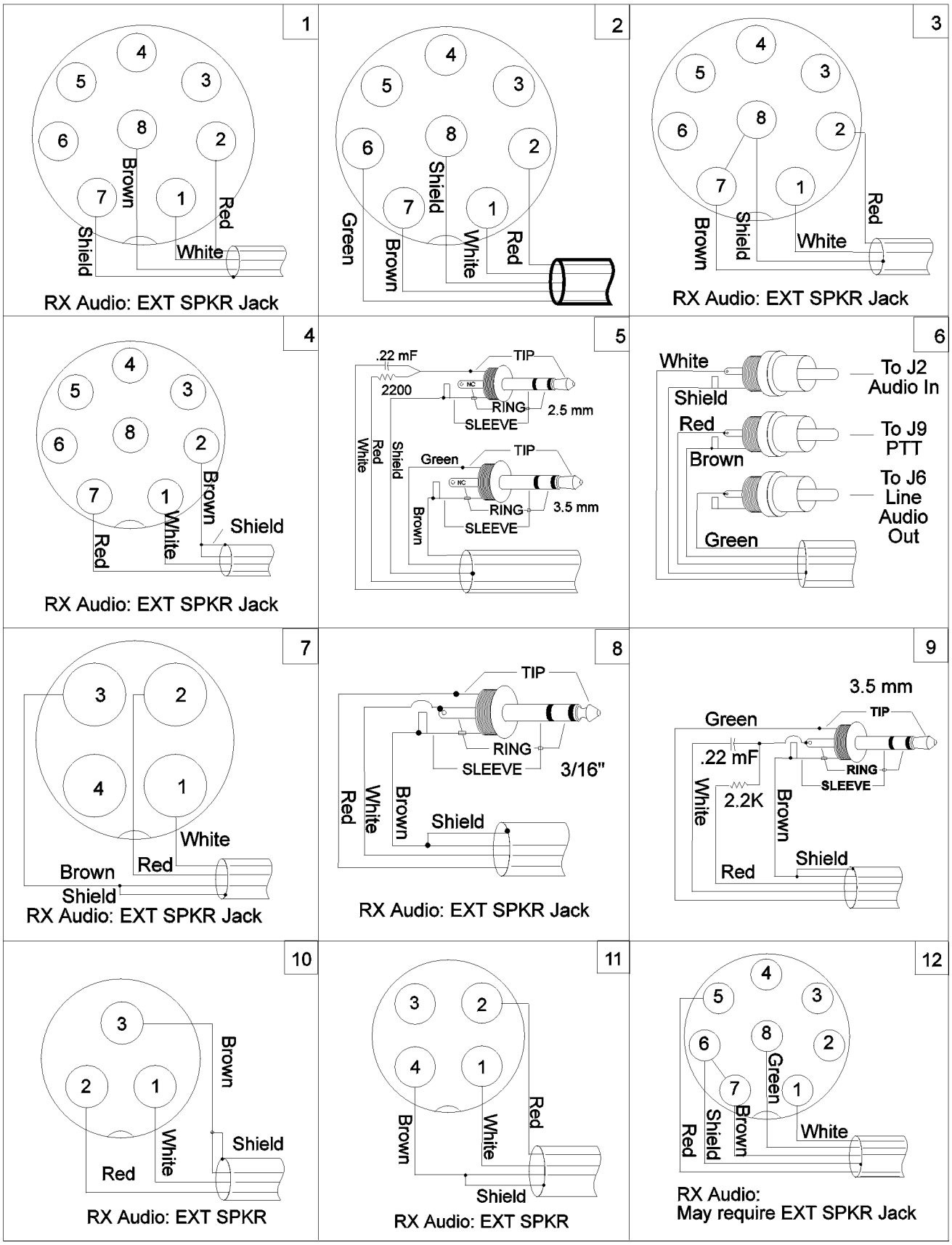
1
4
5
3
6
8
2
7
1
Brown
Red
Shield
White
RX Audio: EXT SPKR Jack
2
4
5
3
6
8
2
7
1
Shield
Green
Brown
White
Red
3
4
5
3
6
8
2
7
1
Red
Brown
Shield
White
RX Audio: EXT SPKR Jack
4
4
5
3
6
8
2
7
1
Brown
Shield
Red
White
RX Audio: EXT SPKR Jack
5
.22 mF
TIP
2200
NC
RING
2.5 mm
SLEEVE
Red
White
Shield
Green
TIP
NC
RING
3.5 mm
SLEEVE
Brown
6
White
To J2
Audio In
Shield
Red
To J9
PTT
Brown
To J6
Line
Audio
Out
Green
7
3
2
4
1
White
Brown
Red
Shield
RX Audio: EXT SPKR Jack
8
TIP
RING
SLEEVE
3/16"
Red
White
Brown
Shield
RX Audio: EXT SPKR Jack
9
3.5 mm
TIP
Green
.22 mF
RING
SLEEVE
White
2.2K
Brown
Shield
Red
10
3
Brown
2
1
White
Shield
Red
RX Audio: EXT SPKR
11
3
2
4
1
Red
Brown
White
Shield
RX Audio: EXT SPKR
12
4
5
3
6
8
2
Green
7
1
Shield
Brown
White
Red
RX Audio:
May require EXT SPKR Jack

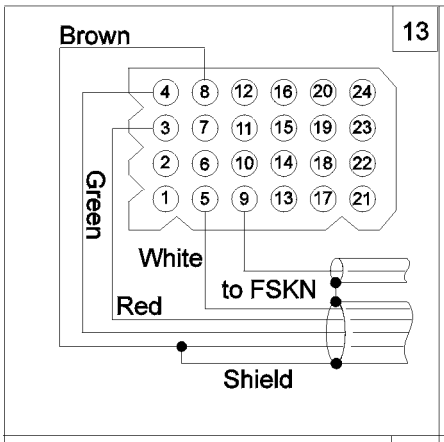
13
Brown
Green
White
Red
to FSKN
Shield

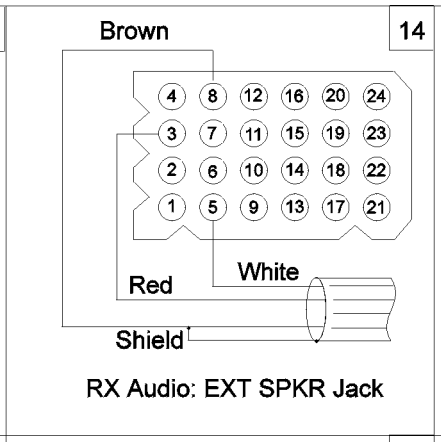
14
Brown
Red
White
Shield
RX Audio: EXT SPKR Jack

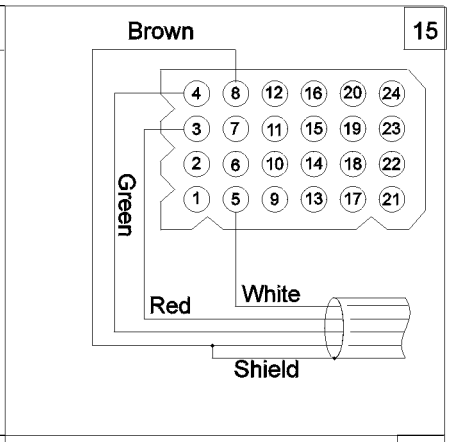
15
Brown
Green
Red
White
Shield

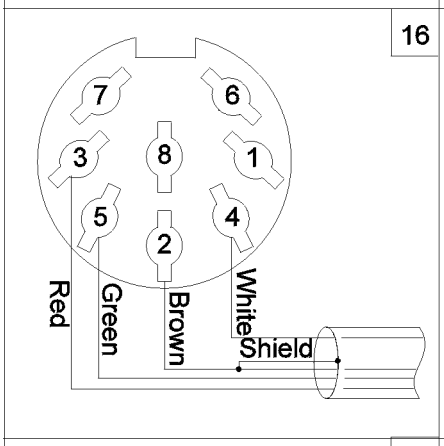
16
Red
Green
Brown
White
Shield

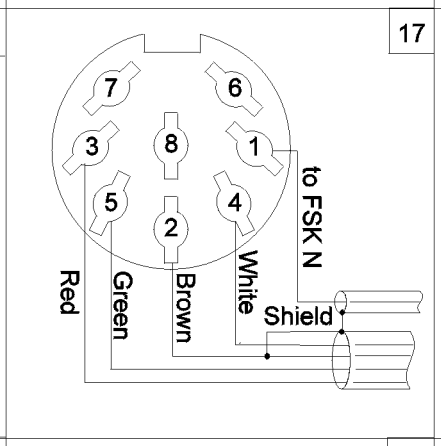
17
to FSK N
Red
Green
Brown
White
Shield

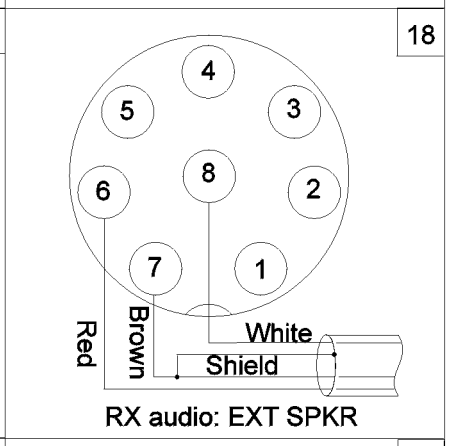
18
Red
Brown
White
Shield
RX audio: EXT SPKR

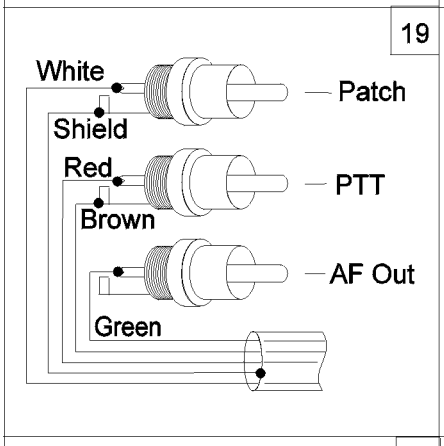
19
White
Shield
Patch
Red
Brown
PTT
AF Out
Green

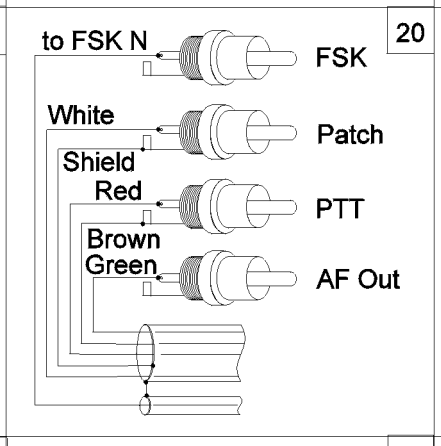
20
to FSK N
FSK
White
Shield
Patch
Red
PTT
Brown
Green
AF Out

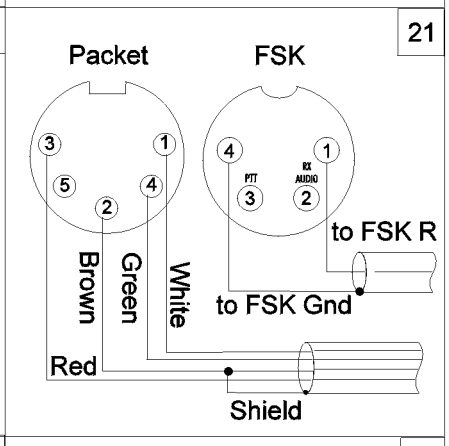
21
Packet
FSK
PTT
RX AUDIO
to FSK R
Brown
Green
White
to FSK Gnd
Red
Shield

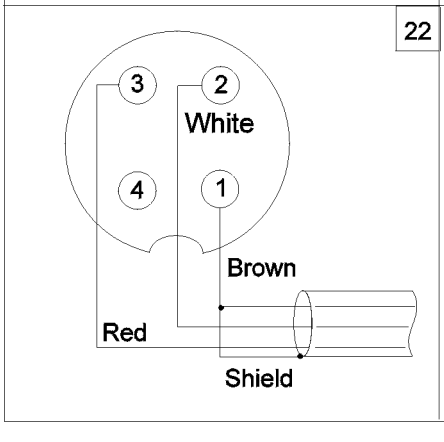
22
White
Brown
Red
Shield

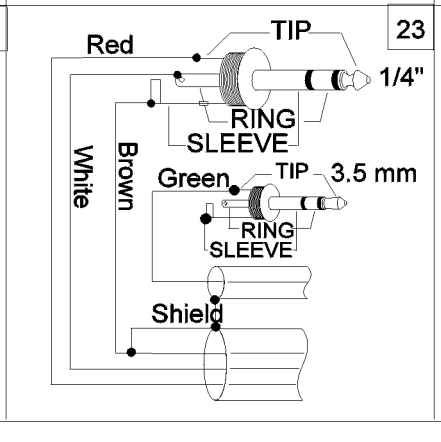
23
Red
TIP
1/4"
RING
SLEEVE
White
Brown
Green
TIP
3.5 mm
RING
SLEEVE
Shield

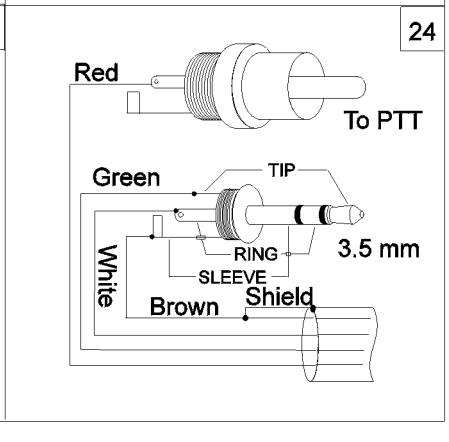
24
Red
To PTT
Green
TIP
3.5 mm
RING
SLEEVE
White
Brown
Shield

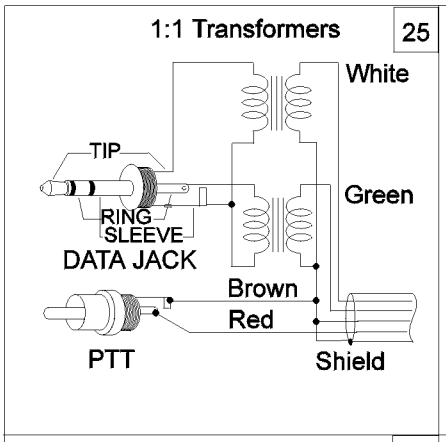
1:1 Transformers
25
White
TIP
Green
RING
SLEEVE
DATA JACK
Brown
Red
PTT
Shield

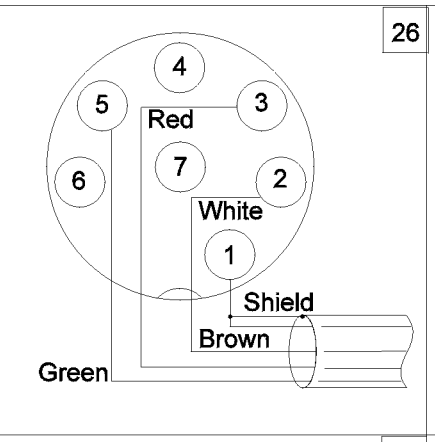
26
4
5
3
Red
6
7
2
White
1
Shield
Brown
Green

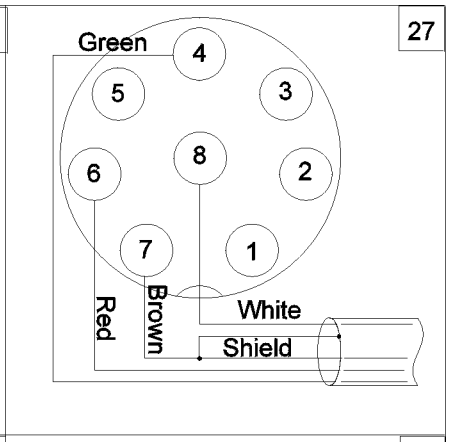
27
Green
4
5
3
6
8
2
7
1
Red
Brown
White
Shield

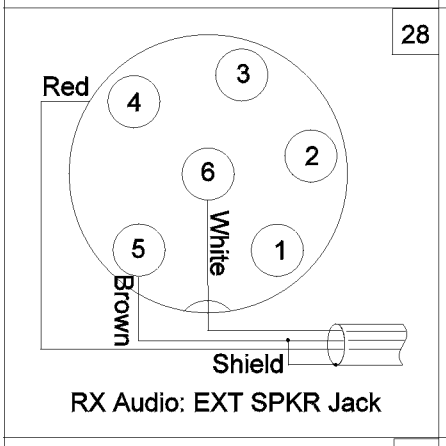
28
Red
4
3
2
6
5
1
White
Brown
Shield
RX Audio: EXT SPKR Jack

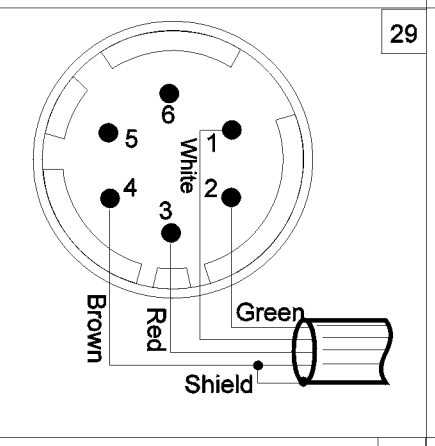
29
6
5
1
White
4
2
3
Brown
Red
Green
Shield

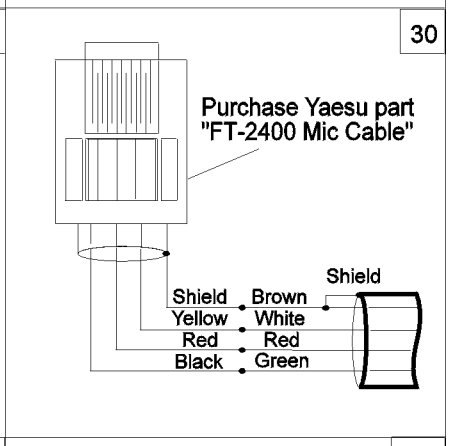
30
Purchase Yaesu part
"FT-2400 Mic Cable"
Shield
Shield
Brown
Yellow
White
Red
Red
Black
Green

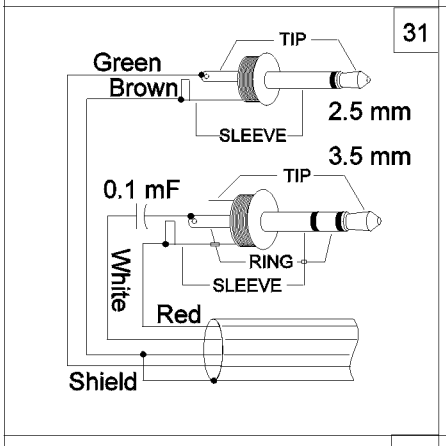
31
TIP
Green
Brown
2.5 mm
SLEEVE
3.5 mm
0.1 mF
TIP
RING
SLEEVE
White
Red
Shield

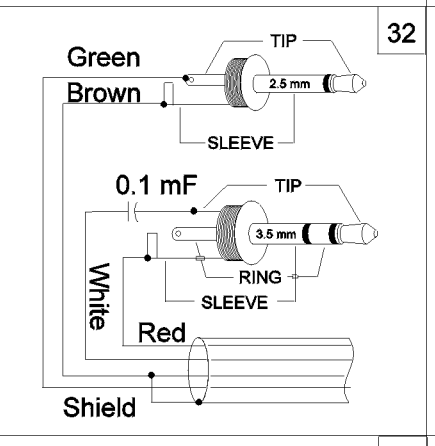
32
TIP
Green
Brown
2.5 mm
SLEEVE
0.1 mF
TIP
3.5 mm
RING
SLEEVE
White
Red
Shield

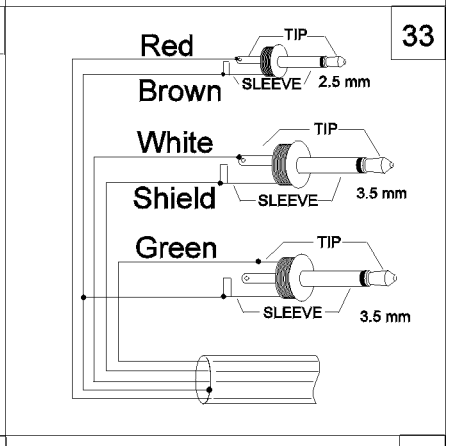
33
Red
TIP
Brown
SLEEVE
2.5 mm
White
TIP
Shield
SLEEVE
3.5 mm
Green
TIP
SLEEVE
3.5 mm

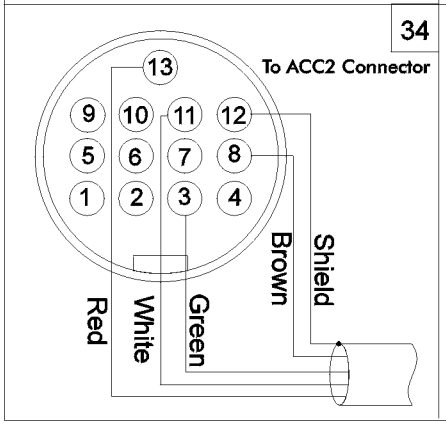
34
To ACC2 Connector
13
9
10
11
12
5
6
7
8
1
2
3
4
Brown
Shield
Red
White
Green

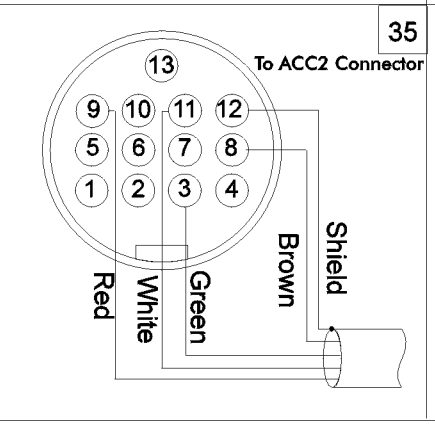
35
To ACC2 Connector
13
9
10
11
12
5
6
7
8
1
2
3
4
Brown
Shield
Red
White
Green

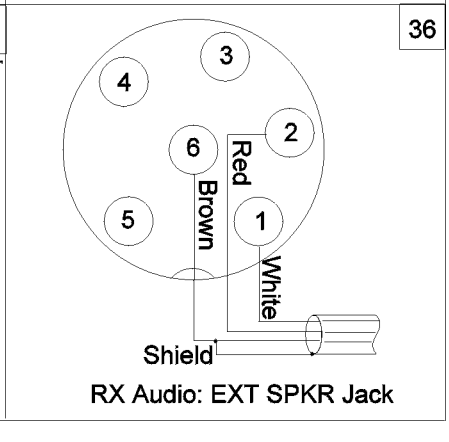
36
3
4
2
6
Red
Brown
5
1
White
Shield
RX Audio: EXT SPKR Jack

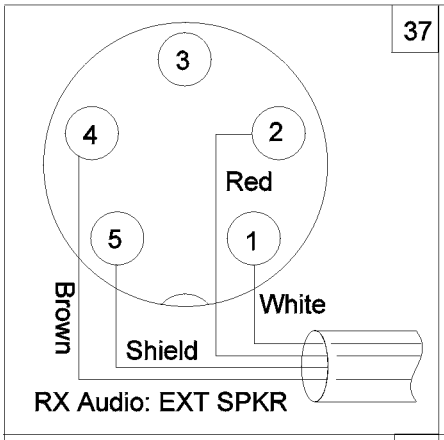
37
3
4
2
Red
5
1
Brown
White
Shield
RX Audio: EXT SPKR

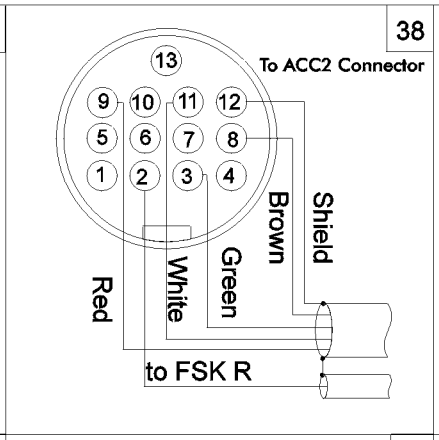
38
To ACC2 Connector
13
9 10 11 12
5 6 7 8
1 2 3 4
Shield
Brown
Green
White
Red
to FSK R

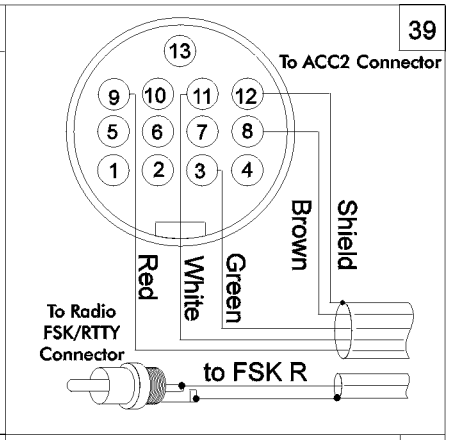
39
To ACC2 Connector
13
9 10 11 12
5 6 7 8
1 2 3 4
Shield
Brown
Green
White
Red
To Radio
FSK/RTTY
Connector
to FSK R

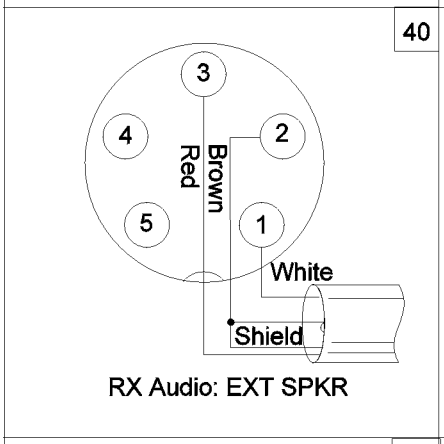
40
3
4
2
Brown
Red
5
1
White
Shield
RX Audio: EXT SPKR

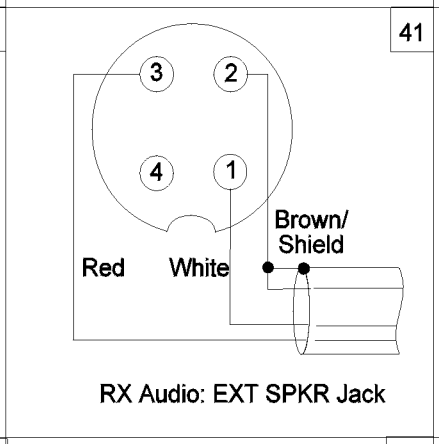
41
3
2
4
1
Brown/
Shield
Red
White
RX Audio: EXT SPKR Jack

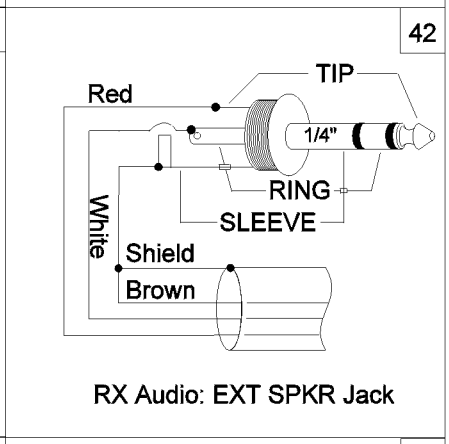
42
TIP
Red
1/4"
RING
SLEEVE
White
Shield
Brown
RX Audio: EXT SPKR Jack

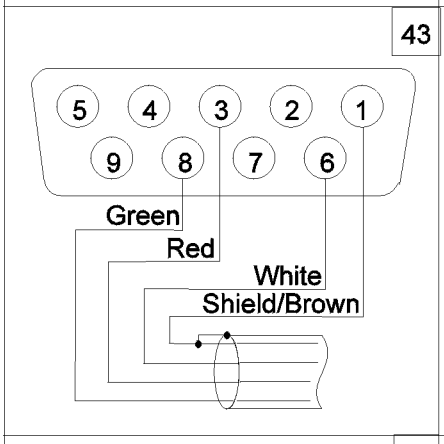
43
5 4 3 2 1
9 8 7 6
Green
Red
White
Shield/Brown

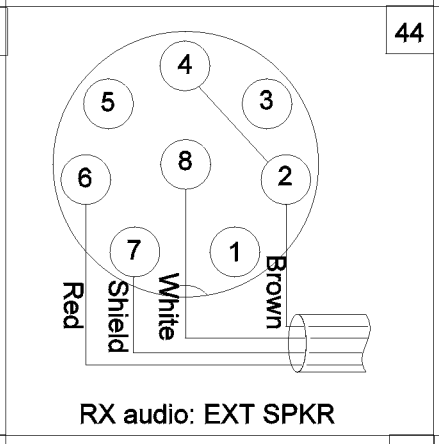
44
4
5
3
6
8
2
7
1
Red
Shield
White
Brown
RX audio: EXT SPKR

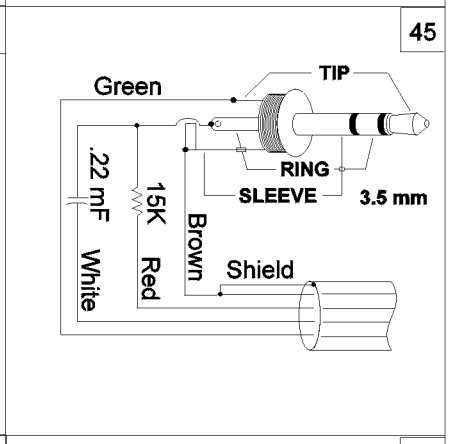
45
TIP
Green
RING
SLEEVE
3.5 mm
.22 mF
15K
Brown
White
Red
Shield

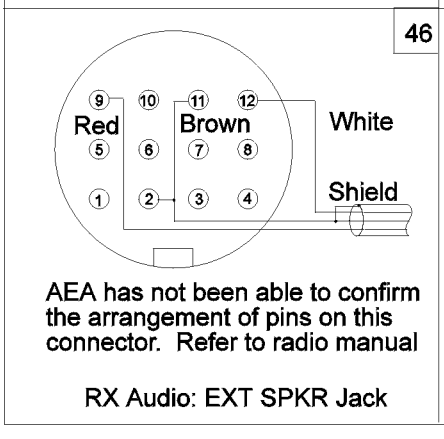
46
9 10 11 12
Red
Brown
White
5 6 7 8
1 2 3 4
Shield
AEA has not been able to confirm
the arrangement of pins on this
connector. Refer to radio manual
RX Audio: EXT SPKR Jack

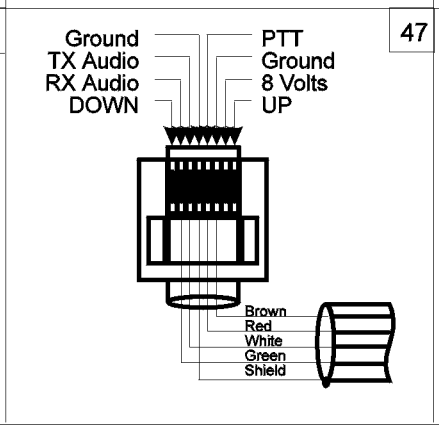
47
Ground
TX Audio
RX Audio
DOWN
PTT
Ground
8 Volts
UP
Brown
Red
White
Green
Shield

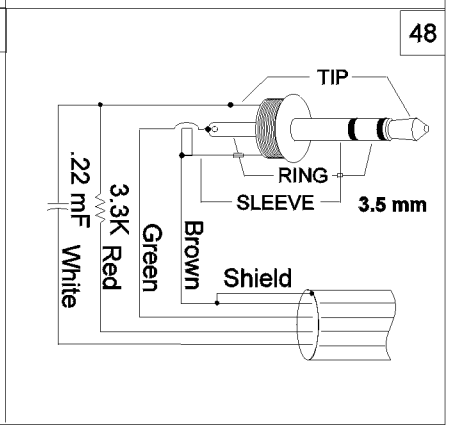
48
TIP
RING
SLEEVE
3.5 mm
.22 mF
3.3K
Green
Brown
White
Red
Shield

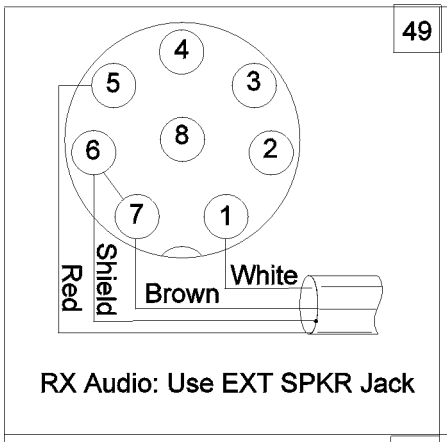
49
4
5
3
8
6
2
7
1
Red
Shield
Brown
White
RX Audio: Use EXT SPKR Jack

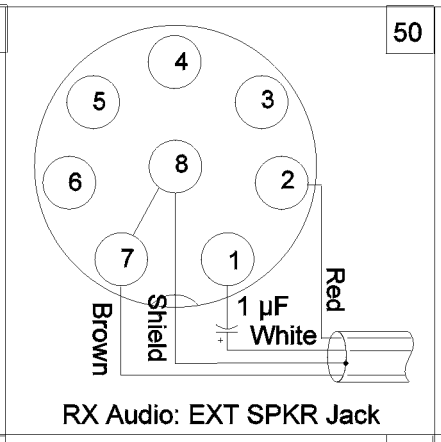
50
4
5
3
8
6
2
7
1
Brown
Shield
1 µF
Red
White
RX Audio: EXT SPKR Jack

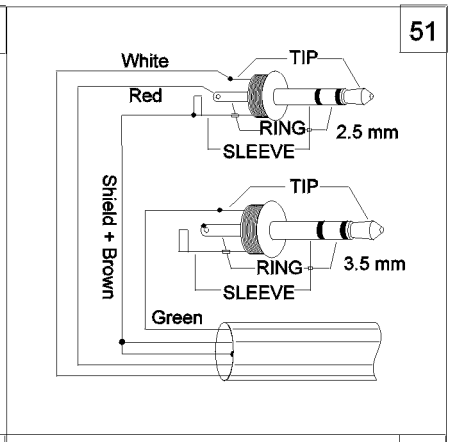
51
White
TIP
Red
RING
2.5 mm
SLEEVE
Shield + Brown
TIP
RING
3.5 mm
SLEEVE
Green

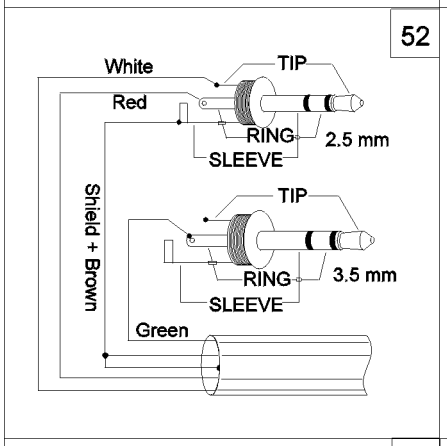
52
White
TIP
Red
RING
2.5 mm
SLEEVE
Shield + Brown
TIP
RING
3.5 mm
SLEEVE
Green

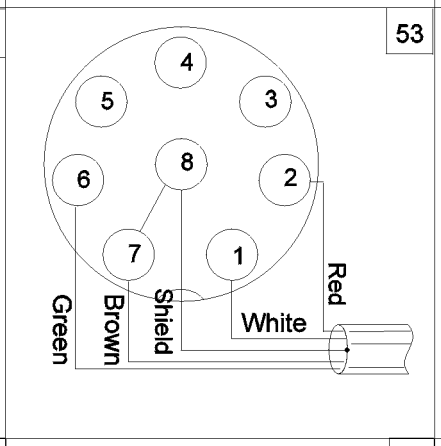
53
4
5
3
8
6
2
7
1
Green
Brown
Shield
White
Red

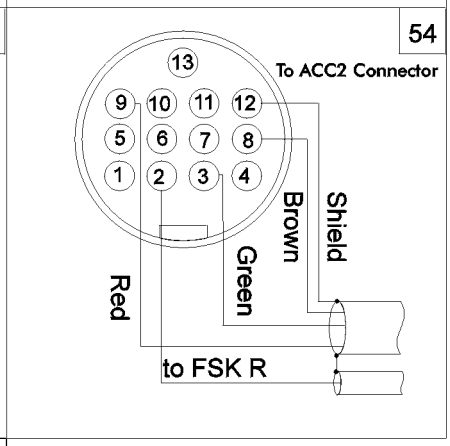
54
13
To ACC2 Connector
9
10
11
12
5
6
7
8
1
2
3
4
Red
Green
Brown
Shield
to FSK R

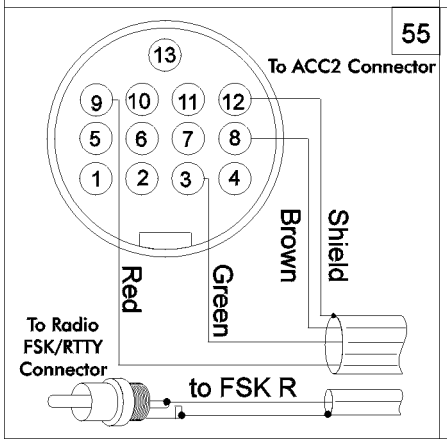
55
13
To ACC2 Connector
9
10
11
12
5
6
7
8
1
2
3
4
Red
Green
Brown
Shield
To Radio
FSK/RTTY
Connector
to FSK R

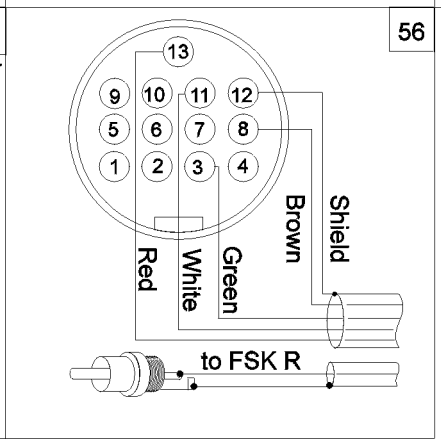
56
13
9
10
11
12
5
6
7
8
1
2
3
4
Red
White
Green
Brown
Shield
to FSK R

3RDPARTY, 5-1, 5-5, A-8
5BIT, A-8
6BIT, A-8
8BITCONV, 4-25, A-9, A-16, A-28

AAB, 6-5, 6-8, 7-7, A-9, A-33, A-43, A-78
ABAUD, 6-8, A-9, A-61, A-68, A-75
ACHG, 7-7, A-9, A-15, A-43, A-69
ACK, 4-7, 4-20, 4-21, A-10, A-29, A-37, A-67, A-74
ACKPRIOR, 4-21, A-10
ACRDISP, 6-6, 6-8, A-11, A-47
ACRPACK, 4-17, A-11, A-69
ACRRTTY, 6-6, A-11, A-15, A-47, A-69
ADDRESS, iii, 5-10, A-12, A-45, A-51, A-63
ADELAY, 7-9, A-12, A-15, A-69
AFILTER, 4-26, A-12, A-13
AFSK, 1-3, 2-7, 2-9, 3-3, 3-5, 3-7, 3-9, 3-10, 3-12, 4-2, 4-4, 4-12
AGC, 3-10, 7-9, 194
ALC, 3-10, 3-11, 3-12, 7-9
ALFDISP, 6-6, 6-8, A-13, A-47
ALFPACK, 4-17, A-13
ALFRTTY, 6-6, A-14, A-15, A-47, A-69
ALIST, 7-3, 7-7, 7-8, 10-3, A-14, A-43
Alphabet, 6-7, A-16, A-27, A-28, A-59
ALTMODEM, 4-26, A-14
Amplifier, 2-1, 3-10, A-17, A-74
AMTOR, 7-1, A-15
AMTEX, 7-10
Apple, 1-2, 2-4, 2-5, 2-10, 2-12, A-65
ARQ, 7-1, 7-3, 7-4-7-9, A-15
ARQTMO, A-15, A-69
ASCII, 6-1, A-16
ASPECT, 9-5, A-16, A-41
AUDELAY, 4-18, 4-19, A-6, A-17
Audio, 3-1, 3-2, 3-3, 3-5, 3-6, 3-7, 3-9, 3-10, 3-11, 3-12
Auto-AnswerBack, 6-5, 7-5, 7-7, A-9, A-78
Auto-Forward, 5-9, 5-10, A-44
AUTOBAUD, 1-3, 2-7, A-3, A-17, A-18, A-71
AWLEN, A-5, A-18, A-28, A-64
AX25L2V2, A-18
AXDELAY, 4-19, A-18, A-19
AXHANG, 4-19, A-18, A-19

Backspace, 4-18, A-20, A-35, A-67
Bar-graph, 3-7, 4-5, 9-3
Battery, 2-2, 2-7, 4-1-4-4, A-3, A-4, A-17
Baud Rate, 2-2, 2-7, 2-8, 2-12, 4-23, A-9, A-17, A-42, A-66, A-71
BAUDOT, 6-1, A-19
BBSMSGS, 4-26, A-19
BEACON, 4-7, 4-13, 4-15, 4-19, A-6, A-20, A-21, A-49, A-53, A-75
Bells, 4-17, A-23, A-27, A-38, A-48
BITINV, 1-1, 6-7, 10-3, A-8, A-20
BKONDEL, 4-18, A-20, A-35
BTEXT, 4-13, A-5, A-20, A-21, A-72
Bulletin, 5-3, 5-5, 5-6, 5-9
BYE, 4-9, 5-1, 5-2, 5-3, 5-8, 5-10

Cables, 1-1, 2-1, 2-2, 2-6, 2-9, 3-1, 3-4, 3-8, 3-10, 4-1, 4-12
CALIBRATE, 3-9, 3-11, 4-25, A-21, A-43
Callsign, 2-8, 4-2, 5-3, 5-5, 5-8, A-57
CANLINE, 4-18, 5-3, A-22
CANPAC, 4-18, A-22
Carrier, 1-4, 4-13, A-18, A-35, A-41, A-63, A-70
CASEDISP, A-22
CBELL, 4-17, A-23
CCIR, 1-1, 7-1, 7-2, 7-5, 10-4, A-15, A-33, A-57, A-58, A-72, A-78
CCITT, A-8, A-16
CFROM, 4-26, A-3, A-5, A-23
Change-over (AMTOR), 7-5, 7-7, 7-9, A-9, A-39
CHCALL, 4-22, A-23, A-24, A-25
CHDOUBLE, 4-22, A-24, A-25
CHECK, A-24
Checksum, A-4
CHSWITCH, 4-22, A-6, A-24, A-25
CMDTIME, 4-25, A-25, A-29, A-73
CMSG, 4-8, 4-13, 5-2, A-3, A-26, A-31
CODE, 6-7, 8-1, 8-4, 10-1, 10-3, 10-4, A-26
COM-PAKRATT, 1-2, 2-4, 2-6, 3-9, 3-11
COMMAND, A-29
Commodore, 1-2, 2-4, 2-6, 2-10, 2-12
CompuServe, ii, 2-5, 2-6
CONMODE, 4-25, A-29, A-79
CONNECT, 4-8, 4-13, 4-15, 4-17, 4-19, 4-21, 4-22, 4-25, A-29
Connector, 1-1, 1-3, 2-1, 2-3, 2-6, 2-9, 2-10, 2-11, 3-1-3-7
CONPERM, 4-26, A-5, A-30
CONSTAMP, 4-17, A-30, A-32, A-34
CONVERSE, A-30
CPACTIME, 4-26, A-30, A-62

CQ, 4-25, 6-4, 7-1, 7-4, 8-2, 8-3, A-39, A-75
CRADD, 6-6, A-31
CRC, 4-19, A-63
CSTATUS, 4-22, A-31, A-43
CTEXT, 4-13, 4-18, 5-2, A-3, A-5, A-26, A-31
CUSTOM, A-9, A-32, A-33, A-78
CW, 1-3, 3-6, 3-8, 3-10, 3-11, 3-12, 8-1, 8-4, A-32, A-34, A-47, A-56, A-79
CWID, A-34, A-39, A-78, A-79
Cyrillic, A-26, A-27, A-28

Damage, iii, 2-1, 3-8
DAYSTAMP, 4-16, A-34, A-52, A-55, A-59, A-72
DAYTIME, 4-16, 4-17, 5-4, 6-5, 6-8, 7-7, 8-3, A-4, A-30, A-34, A-52, A-55, A-59, A-72
DCD, 1-3, 1-4, 3-10, 3-12, 4-2-4-5, 4-13, 4-24, 6-3, 7-3, 8-2, 10-2, A-32, A-35, A-41, A-64, A-77
DCDCONN, 4-26, A-35
Decrypt, A-8
DELETE, 4-18, 5-2, 5-3, A-20, A-35
Destination, 4-6, 4-19, 4-20, 5-3, 5-10, A-29, A-49, A-54, A-75
Deviation, 3-10, 4-12
DFROM, 4-14, A-5, A-35
DIDDLE, 6-6, 6-8, A-36, A-37
Digipeat, 4-6, 4-9, 4-14, 4-19, 4-26, A-18, A-35, A-54, A-75
DISCONNEct, 2-2, 2-9, 3-10, 4-3, 4-7, 4-8, 4-9, 4-15, 5-3, A-36
DISPLAY, A-36, A-37
Distortion, 4-25, 9-5, A-16
DPSK, 4-26, A-14
Dumb Terminal, 2-4, 3-9, 3-11
DWAIT, 4-21, A-10, A-37, A-63, A-67

EAS, 6-6, 6-8, 7-6-7-8, 8-3, A-15, A-37, A-69
ECHO, 2-8-2-9, 6-6, 7-8, 8-3, A-20, A-37, A-38
Edit, 4-17, 4-18, 5-1, 5-2, 5-3, 5-5, 5-10, A-30, A-35, A-50, A-62, A-67, A-73, A-78
Encryption, 6-7, 10-3, A-20
Erase, 4-18, A-20
ERRCHAR, A-38
ESCAPE, A-25, A-38, A-73

Farnsworth, A-54
FAX, 9-1, A-38
FAXNEG, 9-5, A-39
FCC, i, 6-7, 7-1, 7-5, 7-7
FEC, 7-1, 7-3, 7-4, 7-6, 7-7, 7-9, A-15, A-17, A-39, A-68, A-69, A-70
Feedback, 4-25
FIGS, A-8, A-28, A-32, A-47, A-61
FIGS-D, 6-5, 7-7, A-27, A-33, A-78
FIGURES-SHIFT, 6-6, A-76
FLOW, A-42
Flow Control, 2-11, 2-12, 4-25, 4-26, 7-6, A-12, A-39, A-73, A-74, A-75, A-78
FM, 1-2, 3-9, 3-10, 3-11, 3-12, 4-1, 4-4, 4-18, A-17
Forwarding, 5-3, 5-6, 5-9, 5-10, A-44, A-46
FRACK, 4-20, 4-23, A-6, A-10, A-40
Frame, 4-13, 4-15, 4-20, 5-1, A-7, A-20, A-24, A-40, A-49, A-53, A-54, A-73, A-74, A-77
FREE, 4-8, 4-9, 5-1, 5-5, 5-6, 5-7, 5-8, 5-9, 7-1, A-7, A-37, A-38, A-40, A-76
Frequencies, 4-4, 4-23, 5-9, 7-10, 9-1, 9-2, 9-3, 10-4, A-21
Frequency-Shift, 3-6, 10-1
FRMR, A-7, A-49, A-53
FSK, 1-3, 3-5, 3-6, 3-7, 3-8, 10-1, A-14, A-32, A-75
FSPEED, 9-5, A-40, A-41, A-42
Full-Duplex, 2-6, 4-26, A-41
FULLDUP, 4-26, A-41

GRAPHICS, A-41
Ground, 1-3, 2-2, 2-11, 3-1, 3-2, 3-3, 3-5, 3-7

Half-Duplex, 4-26
HAMPAC, 2-5
HBAUD, 2-8, 2-9, 4-12, 4-23, A-10, A-14, A-21, A-42, A-76
HEADERLN, 4-26, A-42
Headers, 4-16, 5-2, A-48, A-49, A-50, A-53
HELP, A-43
HERE IS, 6-5, 6-8, 7-5, 7-7, A-15, A-43, A-69
Hexadecimal, A-2
HF, 3-3, 3-5, 3-6, 3-9, 4-1, 4-23, 4-24, 4-25, 6-1, 7-1, 8-1, 9-2, 10-1, A-76
HID, 4-26, A-43, A-44, A-52
HOMEBBS, 5-10, A-44, A-46
HOST, A-44
HPOLL, A-33, A-44

I-frames, A-49, A-53, A-75
IBM, 1-2, 2-3, 2-4, 2-5, 2-10, 2-12
ID, 4-5, 4-7, 4-26, 5-6, 6-3, 7-5, A-36, A-43, A-44, A-52, A-56, A-57, A-58
Idle, 6-6, 7-6, 10-4, A-33, A-36, A-39, A-72
IF-Shift, 4-24, 6-2, 7-3, 8-1, 10-1
ILFPACK, 4-17, A-45
Installation, i, ii, 2-1, 2-2, 2-5, 2-6, 3-1
Interfere, i, 4-13, 4-15, A-14
IO, A-12, A-31, A-45
IOC, A-16
IRS, 7-5, A-33
ISS, 7-5, 7-8, A-33
ITA, 6-7, A-16, A-19, A-27

Jack, 3-1, 3-5, 3-6, 3-8, 3-11
JLOG, 5-3, 5-4
Jumper, 2-2, 2-7, 3-8, 4-1, 4-2, 4-4, A-3, A-17
JUSTIFY, 9-4, A-45, A-47

Katakana, A-26, A-28
Keyed, 3-12, 4-14, 8-2, A-17
KILL, 4-9, 5-1, 5-2, 5-3, 5-4, 5-6, 5-7, A-7
KILONFWD, 5-10, A-37, A-46
KISS, 1-1, A-10, A-46, A-64

LED, 1-4, 2-2, 2-7, 2-8, 2-9, 4-2, 4-3, 4-5, 4-13, 4-22, 5-5, 6-1, 6-3, 6-7, 7-2, 7-6
LEFTRITE, 9-5, A-45, A-46
LETTERS-shift, 6-7
Linefeed, 4-17, 6-6, A-45, A-47, A-51
Link, 4-20, 4-21, 7-5, 7-4, 7-6-7-9
Lithium Battery, 2-2, A-4
LOCK, 8-3, 8-4, 9-4, A-43, A-45, A-47
Logical, 4-21, 4-22, A-25, A-31, A-39, A-76
Logon, 5-1, 5-5, 5-6
Loop back, 2-1, 2-6, 4-1, 4-2, 4-4, 4-12
LPM, A-40
LSB, 3-11, 4-23, 4-24, 6-2, 7-2, 7-3, 9-1, 9-2, 10-1, 10-4
LTRS, A-8, A-28, A-36, A-47, A-76

Macintosh, 1-2, 2-4, 2-5
MACRATT, 1-2, 2-4, 2-5, 3-9, 3-11, A-1
Mail, iii, 3-1, 4-5, 4-7, 5-10, A-8
Mailbox, 4-8, 4-9, 5-1, 5-2, 5-7, 5-9, A-47
MAILDROP, 4-8, 5-1, A-5, A-7, A-8, A-36, A-47
Mark, 1-3, 3-7, 3-9, 3-11, 4-2, 5-10, 7-5, A-21, A-68, A-75
MARS, 6-6, A-31, A-32, A-33, A-77
MARSDISP, 6-6, A-8, A-47
MAXFRAME, 4-20, 4-23, A-10, A-48
MBELL, 4-16, A-48
MBX, 4-8, 4-16, 5-3, A-32, A-48, A-53, A-77
MCON, 4-12, 4-16, 5-2, A-32, A-49, A-56, A-77
MDCHECK, 5-1, 5-2, 5-5, 5-10, A-43, A-47, A-50
MDIGI, 4-14, A-50
MDMON, 4-26, 5-2, 5-8, A-37, A-47, A-50
MDPROMPT, 5-2, A-37, A-47, A-51
MEMORY, A-51
MFILTER, 4-16, A-12, A-13, A-51
MFROM, 4-16, A-5, A-32, A-51, A-55
MHEARD, 4-11, 4-12, 4-25, 5-3, 5-4, A-52, A-63
Microphone, 2-5, 3-1-3-3, 3-5, 3-11, 3-12
Microprocessor, 1-3, 9-6
MID, 4-26, A-52, A-56
MMSG, 5-2, A-37, A-47, A-53, A-55
Mode-B (FEC), 7-10
MONITOR, 4-3, 4-5, 4-12, 4-14, 4-15, 4-16, 4-19, 4-23, A-53
MORSE, 8-1, 8-2, 8-3, 8-4, A-53
MPROTO, 4-5, 4-15, 4-16, A-32, A-54, A-77
MRPT, 4-26, A-19, A-32, A-54, A-56
MSPEED, 7-5, 8-3, A-34, A-53, A-54
MSTAMP, 4-16, A-32, A-34, A-54, A-55, A-59
MTEXT, 5-2, A-53, A-55
MTO, 4-16, A-32, A-49, A-55
MULT, 1-4, 4-13, 4-22, 9-3
MWEIGHT, A-56
MXMIT, 4-26, A-37, A-56
MYALIAS, 4-26, A-43, A-44, A-50, A-56
MYALTCAL, A-56
MYCALL, 2-8, 4-2, 4-3, 4-6, 5-1, A-57
MYIDENT, 7-2, 7-4, A-5, A-15, A-39, A-57, A-69
MYMAIL, 5-1, 5-2, 5-8, 5-10, A-8, A-37, A-47, A-58
MYSELCAL, 7-1, 7-2, 7-4, A-5, A-15, A-57, A-58, A-69

Narrow, 3-6, 10-1, A-16, A-21, A-42, A-77
NAVMSG, 7-10, A-58, A-59

NAVSTN, 7-10, A-59
NAVTEX, 1-1, 7-1, 7-10, A-33, A-38, A-43, A-58, A-59
Network, 4-3, 4-7-4-11, 4-14, 4-15, 4-20
NEWMODE, 4-17, A-59, A-60
Node, 4-7, 4-8, 4-9, 4-10, 4-11, 4-20
Noise, 3-10, 3-12, 6-3, 8-4, 10-2, 10-3, A-47, A-77
NOMODE, 4-17, A-59, A-60
NUCR, A-60
NULF, A-60
NULLS, A-37, A-60
NUMS, A-61

OK, A-61
OPMODE, 6-1, 6-7, 7-2, 8-1, 9-3, 10-2, 10-4, A-8, A-33, A-61, A-69
Overdriving, 7-9
Overmodulation, 4-25
Overprinting, 4-17, A-13

P-persistent, 4-21, A-10, A-37, A-63, A-69
PACKET, 4-1, A-61
PACLEN, 4-20, 4-23, A-39, A-61
PACTIME, 4-25, A-30, A-62
PakMail, 1-1, 5-1
Parallel, 9-2, 9-3, A-41, A-64
PARITY, 2-5, 2-6, 2-7, A-5, A-17, A-28, A-62
PASS, 4-18, A-62
PASSALL, 4-19, A-63, A-77
Passband-Tuning, 4-24, 6-2, 7-3, 8-1, 10-1
PBBS, 4-3, 4-7, 4-8, 4-16, 4-23, A-35, A-47
PC-PAKRATT, 1-2, 2-5, 3-9, 3-11, 9-5, A-1
PERSIST, 7-9, A-10, A-63, A-64, A-69
Phasing, 7-6, 10-4, A-12, A-72
PID, A-49, A-53, A-54
PK, A-63
PKT, 1-4, 2-7, 4-2, 4-13, 9-3
Plug, 2-2, 2-7, 3-1, 3-4, 4-1, 9-2
Polarity, 2-10, 2-11, 3-6, 3-8, A-68, A-75
Poll, 4-15, A-10, A-33, A-44, A-49, A-53
PPERSIST, 4-21, A-10, A-37, A-52, A-63, A-64, A-69
PRCON, 9-3, A-64
Preamble, 7-10, A-59
PRFAX, A-64, A-73
Printer, Chap. 9, 10-2, 10-3, A-16, A-39, A-41, A-64, A-65
Priority, 4-21, A-10, A-52, A-55
Prosigns, 8-4
Protocol, 4-9, 4-18, 4-19, 4-20, 4-21, 7-1, 7-4
PROUT, A-64
PRTYPE, 9-2, 9-4, A-41, A-65
Push-To-Talk (PTT), 1-3, 3-1, 3-2, 3-3, 3-5, 3-8, 7-9, A-12, A-79

RAM, 1-3, 5-1, 5-5, A-4, A-34, A-63
RAWHDLC, A-10, A-66
RBAUD, 6-1, 6-5, A-8, A-61, A-66, A-68, A-75
RCVE, 9-3, A-5, A-39, A-43, A-61, A-66, A-79
Rear-panel, 1-3, 2-3, 3-2, 3-12
RECEIVE, A-66
Receive-Audio, 3-2
REDISPLAy, 4-18, A-20, A-39, A-67
Reject, 4-15, 7-10, A-23, A-49, A-53, A-76
RELINK, 4-21, A-25, A-67
Repair, ii
Rephase, A-12
RESET, 2-2, 3-10, 4-2, 4-12, A-3, A-17, A-67
RESPTIME, 4-21, A-6, A-10, A-67
RESTART, A-3, A-5, A-17, A-18, A-68
RETRY, 4-12, 4-20, A-7, A-10, A-40, A-68, A-74
RF, i, 3-10, 4-25, 7-9, 10-4, A-18, A-68
RFEC, A-68
RMA, ii, iii
Roundtable, 4-19, A-49, A-53
Russian, A-28
RX-IN, 3-1, 4-4
RXREV, 6-6, 6-8, 7-8, 10-3, A-8, A-32, A-68

SABM, A-49, A-53
Satellite, 4-26, 9-1, 9-2, A-16, A-39, A-41
Scope, 3-7, 4-11
SELCALL, 7-1, 7-2, 7-4, 7-6, 7-7, A-5, A-15, A-33, A-56, A-57, A-58, A-69
SELFEC, 1-4, 7-7, A-56, A-57, A-58, A-69, A-70
SENDPAC, 4-17, 4-18, A-11, A-69
Shield, 2-7, 3-3, 3-4, 3-5
Shift, 3-5, 4-23, 6-2, 6-5, 6-6, 6-7, 7-3, 9-4, 10-1, 10-4, A-21, A-77
Short-Wave, 1-2, 3-2, 9-1, 10-1
SIAM, 1-1, 6-5, 10-1, 10-2, 10-3, 10-4, A-69
Sign-on, 2-7, 4-2, 5-3, 5-6, A-3, A-13
SIGNAL, 10-1, A-69
Simplex, 4-4, 4-14, A-10
SITOR, 1-1, 7-1, 7-10

SLOTTIME, 4-21, 4-23, A-10, A-63, A-64, A-69
SmartWatch, A-34
Space, 1-3, 3-7, 3-9, 3-11, A-21, A-68, A-75
SQUELCH, 1-3, 3-2, 3-3, 3-4, 3-5, 3-10, 4-5, 4-12, 4-26, 7-9, A-70
SRXALL, A-70
SSB, 1-2, 3-6, 3-9, 3-10, 3-11, 3-12, 4-24, 6-3, 7-4
SSID, A-23, A-29, A-44, A-48, A-52, A-55,
A-56, A-57, A-58
STA, 1-4, 4-13, 5-5, 9-3, A-46
START, A-70
STBY, 1-4, 7-2, 9-3
STOP, A-70
Subject, 5-2, 5-5, 5-8, 5-9, 5-10
Swedish, 8-4
Switching-Time, 7-9
SWL, 1-1, 3-1, 4-2, 6-7
Synchronize, 7-5, 7-6, 7-7, 7-8, 9-4, 10-4, A-14, A-15, A-72
Synchronous, 6-6
SYSOP, 4-9, 5-1, 5-2, 5-3, 5-4, 5-5, 5-6, 5-8, 5-9, 5-10

TAPR, A-10, A-19, A-63
TBAUD, 1-3, A-5, A-17, A-71
TCLEAR, A-43, A-71
TCP/IP, 1-1, 4-9, A-46, A-77
TDBAUD, 10-4, A-71
TDCHAN, 10-4, A-71
TDM, 10-1, 10-3, 10-4, A-33, A-38, A-43, A-61, A-71, A-72
Technician, i, ii
TFC, 1-4, 7-6, A-33
Threshold, 1-4, 2-8, 3-10, 3-12, 4-2, 4-5, 4-24, 6-3, 7-3, 8-2, 9-4, 10-2,
TIME, A-72
Time-Stamp, 4-16, 4-17
TNC, 4-8, 4-9, 4-12, 4-21, 5-4, A-46, A-47, A-67
TRACE, 4-16, A-8, A-56, A-72, A-73
Traffic, 5-3, 5-5, 5-9, 6-6, 7-5-7-8, A-48, A-50
TRANS, 1-4, 4-13, 4-25, A-29, A-43, A-60, A-73
Transliterated, A-26, A-28
Transmit-Audio, 3-2
TRFLOW, 4-25, A-73, A-74
TRIES, 4-20, 5-10, 7-6, A-74
TXDELAY, 4-12, 4-18, 4-19, A-6, A-17, A-18, A-74
TXFLOW, 4-25, A-75
TXREV, 6-1, 6-6, 6-8, 7-8, A-2, A-32, A-75

UA, 2-9, 4-3, 4-5, 4-6, 4-7, 4-15, A-49, A-53
UI-frame, A-43, A-44, A-49, A-50, A-53, A-54, A-73, A-75
Unconnected, 4-15, 4-19, 4-20, A-49, A-53, A-75
UNPROTO, 4-13, 4-19, 4-20, A-6, A-20, A-75
UnShift-On-Space, 6-6, A-76
Unsquelched, 3-10
USB, 9-1, 10-4
USERS, A-76
USOS, 6-6, 6-7, A-8, A-32, A-76

VFO, 4-24, 6-2, 7-3, 8-2, 10-2
VHF, 4-4, 4-8, 4-12, 4-18, 4-21, 4-23, 4-25, A-76
Via, 2-4, 4-14, 4-19, 9-1, A-29, A-75
Voltage, 2-10, 2-11, 3-8, A-70
VOX, 3-10, 7-9

Watchdog, 3-9, 3-11
WEFAX, 9-1, 9-2, 9-3, 9-5, A-16
WHYNOT, 4-16, A-77
Wide-carriage, A-40
WIDESHFT, 6-7, 6-8, 10-1, 10-4, A-8, A-32, A-77
Word-length, A-5, A-18
WORDOUT, 6-6, 6-8, 7-8, 8-4, A-78
Wpm, A-52, A-53, A-54, A-66
WRU, 6-5, 6-8, 7-7, A-8, A-9, A-27, A-33, A-78

XFLOW, 2-11, 2-12, A-1, A-70, A-75, A-78
XMIT, 6-3, 8-2, A-8, A-43, A-79
XMITOK, 4-26, A-79
XOFF, 2-6, 2-11, 2-12, A-75, A-78, A-79
XON, 2-6, 2-11, 2-12, A-75, A-78, A-79

COMMAND	DEFAULT	FUNCTION
3Rdparty	OFF	Enables 3rd party MailDrop messages
5bit	Immediate Command	Starts copying special 5 bit stations
6sit	Immediate Command	Starts copying special 6 bit stations
8bitconv	OFF	Enables 8 bit data in packet/ASCII CONVERSE
AAb	(empty)	Sets the 0-24 character WRU Auto-answerback
ABaud	110 baud	Sets the ASCII baud rate
AChg	Immediate Command	Forces AMTOR and Pactor ARQ Changeover
ACKprior	OFF	Enables priority acknowledgment in packet
ACRDisp	0	Sets terminal output Screen width
ACRPack	ON	Adds Carriage Returns to transmitted packets
ACRRtty	71	Sets the RTTY/AMTOR Auto <CR> insert column
ADelay	4	Sets AMTOR and Pactor transmit delay, 10 ms.
AFilter	OFF	Enables All-mode-receive character filter
ALFDisp	ON	Sends <LF> after <CR> to terminal
ALFPack	OFF	Sends <LF> after <CR> in transmitted packets
ALFrtty	ON	Sends <LF> after <CR> in transmitted RTTY
AList	Immediate Command	Starts the AMTOR ARQ 'Listen' mode
AMTOR	Immediate command	Starts the AMTOR mode in ARQ standby
ARq	(SELCAL)	Starts the AMTOR ARQ call with SELCAL
ARQE	Immediate Command	Starts the ARQ-E receive mode
ARQTmo	60	Sets the AMTOR/Pactor ARQ call time-out
ARQTOL	3	Sets bit jitter tolerance in A.RQ AMTOR
AScii	Immediate Command	Starts the ASCII RTTY mode
ASPect	2 (576)	Sets the received aspect ratio in FAX
AUdelay	2 (20 msec.)	Sets delay before audio is applied after PTT
AUTObaud	OFF	Enables Autobaud routine at every power-on
AWlen	7	Sets ASCII word length to RS-232 terminal
AX512v2	ON	Sets AX.25 Version 2.0 packet protocol
AXDelay	0 (zero)	Sets packet Repeater key-up delay (X10 ms)
AXHang	0 (zero)	Sets racket Repeater hang time (X10 ms)
Baudot	Immediate Command	Starts the Baudot RTTY mode
BBSmsgs	OFF	Enables TAPR style status messages
Beacon	Every 0	Sets the packet beacon timing (X10 seconds)
BItinv	$00	Sets the XOR value to copy bit inverted RTTY
BKondel	ON	Sends <BS> <SP> <BS> for DELETE char.
BBText	(Empty)	Sets the 120-byte packet BEACON message text
CALibrat	Immediate Command	Starts PK-232 AFSK tone calibrate mode
CANline	$18 <CTRL-X>	Sets the LINE DELETE character for editing
CANPac	$19 <CTRL-Y>	Sets the PACKET DELETE character for editing
CASedisp	0 (as is)	Sets the display case (as is/lower/upper)
CBell	OFF	Enables packet and Pactor 'Connect' bell
CCITT	ON	(Use the CODE COMMAND instead)
CFrom	Empty; enter calls	Sets the Connect request/accept list
CHCall	OFF	Shows call sign after packet channel ID
CHDouble	OFF	Shows CHSWITCH character twice
Check	30	Sets Idle packet link time-cut (X10 seconds)
CHSwitch	$00	Sets the channel-select character
CMdtime	10	Sets the Transparent Mode escape time
CMsg	OFF	Sends CTEXT message to packet caller
CODe	0 (international)	Selects Morse/Baudot/AMTOR character sets
COMmand	$03 <CTRL-C>	Sets COMMAND Mode escape character
CONMode	CONVERSE	Selects the mode used when data link starts
Connect	Immediate Command	Sends a packet request to <Call>
CONPerm	OFF	Selects a permanent connection packet link

COMMAND	DEFAULT	FUNCTION
CONstamp	OFF	Marks connections with time/date stamp
CONVerse	Immediate Command	Enters the Converse Mode (Abbrev. X)
CPactime	OFF	Uses PACTIME time-out in Converse mode
CRAdd	OFF	Sends <CR><CR><LF> in RTTY Model,
CStatus	Immediate command	Shows status Of channels (links)
CText	(Sample Text)	Sets 120-byte packet CONNECT message text
CUstom	$0A15	(USE the UBIT command instead)
Cwid	$06 <CTRL-F>	Sets the command to send CWID in RTTY modes
DAYStamp	OFF	Includes DATE in time-stamp
DAytime	None	Set or read the internal time-of-day clock
DCdconn	OFF	Sets RS-232 Pin 8 to follow DCD or Connect
DELete	OFF	Uses DEL ($7F), not <BS> ($08) to erase
DFrom	Empty; enter calls	Sets the digipeat yes or no call sign list
DIDdle	ON	Transmits idle characters In Baudot and ASCII
Disconne	Immediate Command	Sends packet DISC request to distant station
Display	Immediate Command	Shows the PK-232 parameters and classes
DWait	16	Sets the delay for digipeated packets
EAS	OFF	Echoes characters as sent, non-packet modes
Echo	ON	Echoes typed keyboard characters
ERrchar	$5F (_)	Sets AMTOR/Morse displayed error Character
Escape	OFF	Sends ESC character $lB to display as $24
FAx	Immediate command	Enters the facsimile mode
FAXNeg	OFF	Reverses the black/white FAX sense
FEc	Immediate command	Starts an AMTOR FEC transmission
Flow	ON	stops displaying received data while typing
FRack	5	Sets time (X1 Sec) to wait for packet ACK
FREe	Immediate Command	Displays available memory for MailDrop
FRIck	0	sets timer for packet meteor scatter mode
FSpeed	2	sets the FAX horizontal scan rate per second
FUlldup	OFF	Enables Full-Duplex packet operation
GRaphics	1 (960 dots)	Sets the dot density used for FAX operation
HBaud	1200 bauds	Sets the packet radio link baud rate
HEAderln	ON	Inserts <CR> after monitored packet headers
Help	None	Shows a brief HELP text on screen
HEReis	$02 <CTRL-B>	Sets the character that sends your AAB text
HId	OFF	Sends HDLC ID UI packet every 9.5 minutes
HOMebbs	None	Sets callsign of the BBS for forwarding
HOST	OFF	Enables HOST computer interface
Hpoll	ON	Sets Host polling be used in Host interface
Id	immediate command	sends an ID in Baudot, ASCII AMTOR and packet
ILfpack	ON	Ignores line feeds from terminal in packet
Justify	immediate command	Moves received FAX left a number X 0.5"
K	Immediate command	Enters the Converse mode (same as CONVerse)
KILLONFWD	ON	Kills messages after reverse forwarding
KISS	0 (OFF)	Starts the KISS INC host protocol
KISSAddr	0	Sets the Address used in extended KISS mode
LAstmsg	Immediate Command	Sets/shows the Last maildrop message number
LEftrite	ON	Sets left-to-right Scan direction for FAX
LIte	OFF	Enables Timewave's Packet Lite HP protocol
Lock	Immediate Command	Locks Morse speed/ forces lower case in RTTY
MAildrop	OFF	Enables the Packet MailDrop for remote users
MARsdisp	OFF	Translates received LTRS & FIGS characters
MAxframe	4	Sets a maximum of un-ACK'd packet frames
MBE11	OFF	Rings bell when packet station heard
MBX	none, (calls)	Monitors packet channel without headers
MCon	0 (zero)	Monitors packets while connected (0-6)

COMMAND	DEFAULT	FUNCTION
MDCheck	Immediate Command	Allows you to check into your own MailDrop
MDigi	OFF	Monitors packet frames that you digipeat
MDMon	OFF	Monitors stations using your MailDrop
MDPrompt	(see text)	Sets an 80 character MailDrop message prompt
MFIlter	$80	Filters received ASCII characters
MFrom	ALL (calls)	Monitors packets FROM other packet stations
MHeard	Immediate Command	Displays call packet signs heard
MId	0	Enables a Morse ID to be sent in packet
MMsg	OFF	Enables the MailDrop sign on message
Monitor	4 (UA DM C D I UI)	Sets the packet Monitor mode level (0-6)
MOrse	Immediate Command	Starts the Morse mode, unlock speed
MProto	OFF	Enables monitoring of all packet protocols
MRpt	ON	Shows digipeaters in packet headers
MSPeed	20	Sets the Morse speed in WPM (5-99)
MStamp	OFF	Time-stamps monitored packet frames
MTExt	(see text)	Sets a 120 character MailDrop sign-on message
MTo	Empty; enter calls	Monitors packets TO other station callsigns
MWeight	10	Sets the Morse transmit dot weighting
MXmit	OFF	Monitors transmitted packet frames
MYAlias	None; enter yours	Sets the alternate MYCALL for digipeating
MYALTcal	Empty; enter yours	Sets the alternate AMTOR SELCAL
MYCall	PK232; enter yours	Sets YOUR packet call sign (MUST BE ENTERED)
MYIdent	None; enter yours	Sets your CCIR-625 7-character AMTOR SELCAL
MYMail	None; enter yours	Sets your Packet MailDrop callsign
MYPTcall	None; enter yours	Sets your Pactor callsign
MYSelcal	Empty; enter yours	Sets your AMTOR SELCAL, 4 letters
NAVMsg	ALL	Determines which NAVTEX messages you monitor
NAVStn	ALL	Determines which NAVTEX stations you monitor
NAvtex	Immediate Command	Starts the NAVTEX/AMTEX receive mode
NEwmode	ON	Returns to Command mode at disconnect
NOmode OFF		Sets NO mode changes (eg. cmd: to CONVERSE)
NUCr	OFF	Sends Nulls to terminal after <CR>
NULf	OFF	Sends Nulls to terminal after <LF>
NULLs	0 (zero)	Sets the number of for NUCR and NULF
Nums	Immediate Command	Forces FIGS case in Baudot, AMTOR and TDM
OK	Immediate Command	Transfers to mode after Signal Identification
Opmode	Immediate Command	Displays current PK-232 operating mode
PAcket	Immediate Command	Starts the Packet Mode
PACLen	128	Sets the number user data bytes in a packet
PACTime	AFTER 10	Sets the packet automatic transmit timer
PACTor	Immediate Command	Enters the Pactor mode (PT for short)
PARity	3 (even)	Sets the terminal vrogram parity (0-3)
PASs	$16 <CTRL-V>	Sets the converse mode pass character
PASSAll OFF		Ignores CRC in receiving packets (Junk mode)
PErsist	63	Sets the P-persistent CSMA threshold
PPersist	014	Selects P-persistent CSMA operation
PRCon	OFF	Enables a parallel printer you have connected
PPFax	ON	Prints received PAX to parallel printer
PRout	OFF	Sends all received data to parallel printer
PRType	2 (Epson)	Sets the graphics emulation for FAX printing
PT200	ON	Allows 200 bauds for Pactor if link is good
PTConn	Immediate Command	Starts a Pactor connect with (CALLSIGN)
PTHuff	0	Selects Pactor data compression (0 = OFF)
PTList	Immediate Command	Starts the Pactor Listen mode
PTOver	$1A <CTRL-Z>	Sets the Pactor link direction change char.
PTSend	Immediate Command	Starts the Pactor unproto send mode (call CQ)

COMMAND	MNEMONIC	FUNCTION
RWWhdlc	OFF	Starts Raw HDLC mode
RBaud	45 bauds (60 WPM)	Sets the Baudot RTTY baud rate selection
Rcve	Immediate Command	Selects the receive mode Morse/RTTY/AMTOR
RECeive	$04 <CTRL-D>	Selects the Receive character used in text
REDispla	$12 <CTRL-R>	Re-displays current terminal input buffer
RELink	OFF	Re-connects after link fails due to retries
RESET	Immediate Command	RESETs PK-232 and bbRAM to factory defaults
RESptime	0	Sets the minimum delay before sending an ACK
RESTART	Immediate Command	Restarts PK-232, same as turning power off/on
REtry	10	Sets the maximum number of packet repeats
RFec	ON	Receives FEC in AMTOR Standby
RFRame	OFF	Checks RTTY characters for framing errors
RXRev	OFF	Reverses the received data mark-space sense
SAmple	Immediate Command	Enters the raw data sampling mode
SELfec	Immediate Command	Starts a selective FEC call with SELCAL
SEndpac	$OD <CTRL-M>	Sets the converse mode "Send packet" char.
SIgnal	Immediate Command	Starts the Signal Identification mode
SLottime	30	Sets the P-persistent CSMA slot time
SQuelch	OFF	Sets the receiver squelch carrier polarity
SRXall	OFF	Allows reception of ALL received SELFEC calls
STart	$11 <CTRL-Q>	Sets character to start sending terminal data
STOp	$13 <CTRL-S>	Sets character to stop sendina terminal data
TBaud	1200 bauds	Sets the ASCII terminal data rate
TClear	Immediate Command	Clears the transmit Buffer (Non-packet modes)
TDBaud	96	Sets the receive data rate for TDM signals
TDChan	0	Sets the receive channel for TDM signals
TDm	Immediate Command	Enters the TDM receive mode
TIme	S14 <CTRL-T>	Inserts the time (in DAYTIME) in text
TMail	OFF	Enables AMTOR and Pactor Maildrop
TMPrompt	(see text)	Sets an 80 character AMTOR Maildrop Message
TRACe	OFF	Enables a Hex dump of received data
Trans	Immediate Command	Enters the Transparent data mode
TRFlow	OFF	Enables software flow control RX in Trans.
TRIes	0 (zero).	Displays or forces packet retry counter
TXDelay	30	Sets the PTT key-to-data delay (X10 ris)
TXFlow	OFF	Enables software flow control TX in Trans.
TXrev	OFF	Reverses transmitted mark-space data sense
UBit	0	Controls seldom used ON/OFF commands
UCmd	0	Controls seldom used numeric commands
Unproto	CQ	Sets the UI packet frame sending Path/address
USers	1	Sets allowed number of packet multi-connects
USOs	OFF	Sets RTTY 'unshift on space’
VHF	ON	Selects VHF Packet - wide (1000 Hz) shift
WHYnot	OFF	Displays reason why packet not displayed
WIdeshft	OFF	Selects RTTY- wide or narrow (200 Hz) shift
Wordout	OFF	Sets Word output in RTTY/AMTOR/Pactor modes
WRu	OFF	Enables auto-answerback (AAB) in RTTY/ASCII
XBaud	0	Sets 8530 baud rate to receive Baudot/ASCII
XFlow	ON	Sets Software (XON/XOFF) RS-232 flow control
Xmit	Immediate Command	Starts sending Baudot/Morse/FAX transmission
XMITOk	ON	Allows transmitter PTT line to be keyed
XOff	$13 <CTRL-S>	Sets character to stop sending received data
XON	$11 <CTRL-Q>	Sets character to start sending received data
ZFree	Immediate Command	Returns number of blocks of available memory
ZStatus	Immediate Command	Returns status of several internal parameters