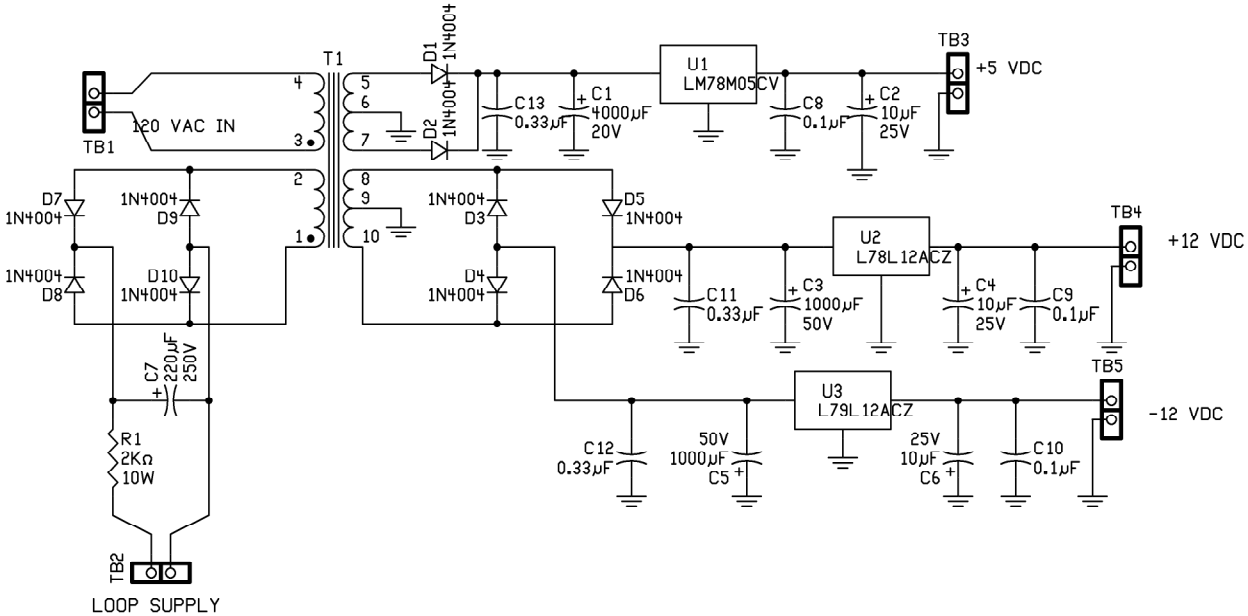

DRAFT

Co:	?		
Title:	Loop Supply Plus		
Board:	?	Revision:	A
Author:	John, W9DDD	Size:	A
Date:	10-31-2018	Sheet	1 of 1