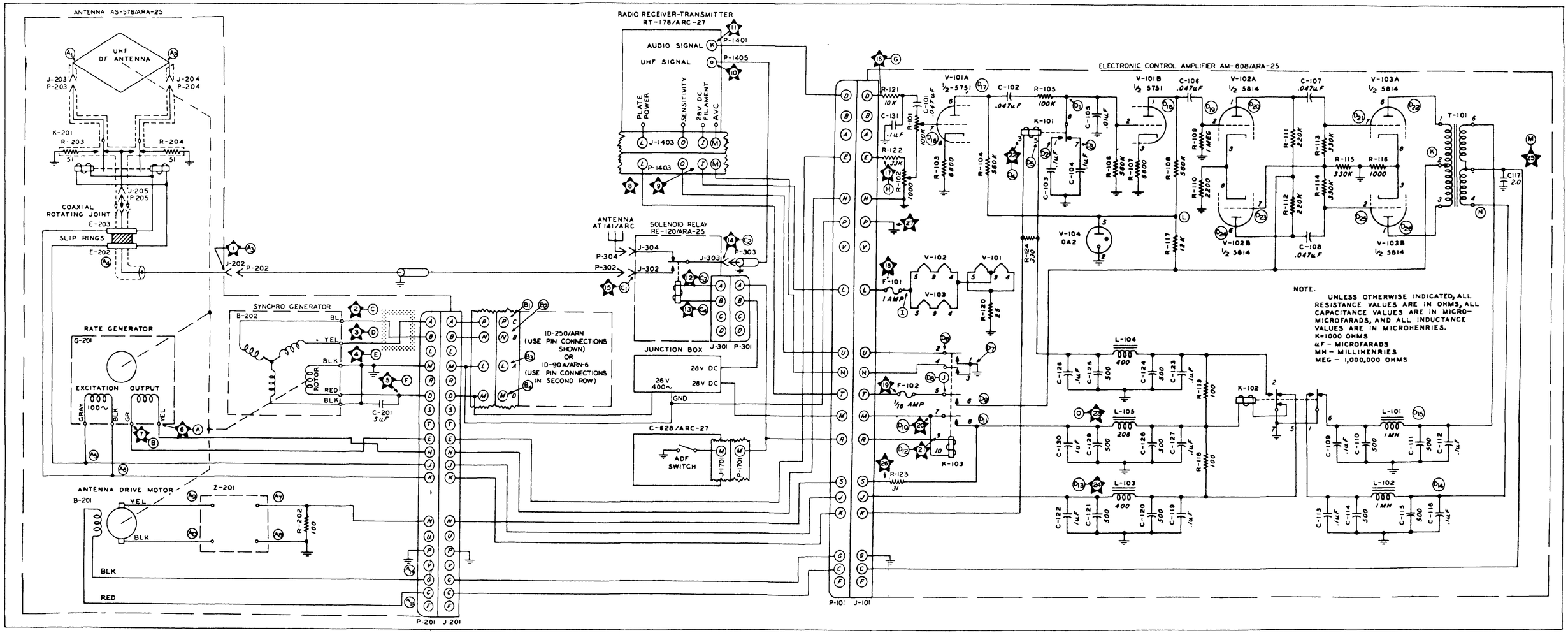

Figure 7-2. Direction Finder Group AN/ARA-25, Schematic Diagram